KNAPE&VOGT® 125 YEARS

Product Guide

Functional Hardware | Storage & Organization

Richelieu

Contents

Drawer Slides 2
Hinge Systems. 60
Lifting Systems 75
Drawer Box Systems 78
Shelving 87
Specialty Hardware 116
Closet Hardware 129
Waste & Recycling. 145
Pull-Out Systems. 159
Lazy Susans 170
Sink Front Trays. 179
Specialty Storage. 186
Garage Organization 190
Index. 204
Knape and Vogt Limited Warranty 206
Return Policy 207

Knape & Vogt's names and logos and all related trademarks, including series numbers (e.g., 85 and 185 Series), trademarks and other intellectual property are the property of Knape & Vogt Manufacturing Company and cannot be used without its express prior written permission.

Drawer Slides

How to Choose a Drawer Slide . . . 3
Drawer Slides Quick Reference Guide . . . 4
Ball-Bearing Slides: Suggested Product Application Matrix . . . 5
Roller Bearing Slides: Suggested Product Application Matrix . . . 6
Undermount Drawer Slide Size Guide . . . 6

Light-Duty Drawer Slides . . . 7

1175 3/4 Extension Center Under Drawer Slide . . . 8
1300 3/4 Extension Drawer Slides . . . 9
1805 Epoxy-Coated Drawer Slide . . . 10
8350 3/4 Extension Drawer Slides . . . 11
4400 Low Profile Full Extension Drawer Slide . . . 12
4450 Low Profile Full Extension Soft-Close Drawer Slide . . . 13

Medium-Duty Drawer Slides . . . 14

8400 Series Drawer Slides . . . 15
8400 Full Extension Box or File Drawer Slide . . . 16
8405 Over Travel Box or File Drawer Slide . . . 17
8407 Full Extension Box or File Drawer Slide with Shelf Tabs . . . 18
8414 Full Extension Hold-Out Precision Drawer Slide . . . 19
8417, 8419, 8400RV Self-Closing Drawer Slides . . . 20
8420, 8425 Metal Cabinet and Drawer Slide . . . 21
8450FM, 8455FM Soft-Close Drawer Slide . . . 22
KV GSlide® GS4200, GS4205 Drawer Slide . . . 23
KV GSlide® GS4260 Push-Open Drawer Slide . . . 24
KV GSlide® GS4270 Soft-Close Drawer Slide . . . 25
KV Tru-Trac® TT100 Full Extension Ball-Bearing Drawer Slide . . . 26
KV DuriSlide™ 4500 Ball-Bearing Drawer Slide . . . 27

Undermount Drawer Slides . . . 28

KV GSlide® GS2070 Full Extension Undermount Drawer Slide . . . 29
Smart Slide Full Fit Power 900 Series Undermount . . . 30
Smart Slide Full Power 800 Series Undermount . . . 31
Smart Slide 700 Series Undermount . . . 32

Heavy-Duty Drawer Slides . . . 33

6500, 6505 Box or File Drawer Slide . . . 34
8500, 8505 Heavy-Duty File or Lateral Drawer Slides . . . 35
8520, 8525 Extra Heavy-Duty File or Lateral Drawer Slides . . . 36
8600, 8605 Heavy-Duty Drawer Slide . . . 37
8620, 8625 Metal Cabinet and Drawer Slide . . . 38
8650FM, 8655FM Heavy-Duty Soft-Close Drawer Slide . . . 39
8810, 8815 Heavy-Duty Drawer Slide . . . 40
8820, 8825 Heavy-Duty Metal Cabinet and Drawer Slide . . . 41
8850FM Heavy-Duty Soft-Close Drawer Slide . . . 42
8900 Extra Heavy-Duty Full Extension Drawer Slide . . . 43
8908 Extra Heavy-Duty Full Extension Locking Drawer Slides . . . 44

Specialty Drawer Slides . . . 45

6300 Corrosion Resistant Finish Drawer Slide . . . 46
6400 Stainless Steel Drawer Slide . . . 47
8000 Over Travel Undermount Pantry Drawer Slide . . . 48
8500T Lateral File Drawer Systems . . . 49

Overhead Door and Desk Slides . . . 50

8150, 8157 3/4 Extension Variable Height Keyboard Slide . . . 51
8250 3/4 Extension Variable Height Pencil or Center Drawer Slide . . . 52
8050 Hinged Door Slide . . . 53

Door Slides and Hinge Kits . . . 54

8070, 8071, 8072 Pivot Door Slides . . . 55
8080, 8081, 8082 Pivot Door Slides . . . 56
8091, 8092 Pivot Door Slides . . . 57
4x4 Pocket Door Full Overlay Kit . . . 58
KV Pocket Door Hinge Kits . . . 59

How to Choose a Drawer Slide

Each drawer slide model has unique performance characteristics that are determined by the intended application for which it is designed. There are many different slides available for a variety of applications. Therefore, choose the slide that best fits your application.

Length: Slide length is a key characteristic. The choice of slide length depends on the length of the material for the application in use. The most common application is with drawers. Example: kitchen cabinets have a standard of 24" depth. Common kitchen cabinet drawers have a length of 22" so a 21" drawer slide is generally used.

Travel: The maximum extension compared to the closed length. Most slides are either 3/4 or full travel. Special extension lengths are available with modified travel.

- A 3/4 travel slide extends to approximately 75% of the slide's length.
- A full travel slide extends so that the drawer's back wall is even with the front of the cabinet - approximately equal to the slide's length.
- An over travel slide extends beyond the front of the cabinet frame by 1-2".

Width: Drawer width affects the synchronization of the drawer slides. In applications with wide drawers (24" <), the user has more leverage which can cause racking of the drawer*. Excessive racking can degrade performance and shorten the slide's life. For wider drawer applications we recommend slides designed for the width of the drawer.

Action: The type of mechanism used to carry the load affects slide performance, motion, noise, and the "fit and feel." KV slides feature rollers, ball-bearings, friction fits, or any combination in achieving movement. In general, superior action requires more rollers or ball-bearings to support and distribute large loads.

Size: In addition to a slide's load rating, the physical size of the drawer and its usage is a consideration. Drawers having unusual width, depth, or height require careful consideration to determine which slide best suits the application.

Operating Clearance: Drawer slides operate within a specified clearance (the space between the drawer and the case). The clearance must be strictly held within the specified tolerances. When the clearance is too wide or too narrow, the slide will experience additional forces and stresses that will reduce its expected performance and life.

Case Goods Construction and Materials: Slides perform better when mounted in rigidly constructed furniture. Construction with soft or thin materials often results in flexing. This causes the drawer to rack from side to side, placing considerable stress on the slides. Do not use drawer slides to provide structure for the application.

Application Factors

Location of Pull: The location of the drawer handle affects slide performance. Center pull positions are recommended because they permit an even pull force for both slides. Side or edge pulls rely on the user to put even force on the drawer when opening. However, the pull force can quickly be out of sync due to a person having more strength in one hand (dominant hand). The result is more force on one slide than the other. This may cause the drawer to rack. The additional side force may hinder performance and does shorten the slide's life.

Installation: Most slide designs require installation in a single position. Carefully study the application before installing the slides in different or abnormal positions.

Orientation: Slides should not be installed in an orientation other than for their intended usage. For example, a slide designed for Side-mounting may lose 75 percent or more of its load carrying capacity if mounted flat underneath a drawer.

Location: Drawer construction, pull position, and type of load are all key considerations to determine the best location to fasten the slides.

Balance: Most slides are designed for use in pairs. For example, suspending a load from just one side (cantilevered load) causes excessive stress and may result in premature slide failure.

Fastening: For best performance, slides require proper fastening. Use the recommended fasteners in sufficient quantity to properly secure the slide. Too few fasteners can cause the slide to pull loose and cause damage. Abnormal fastening methods should be carefully evaluated. Methods such as gluing, riveting, or welding may have unanticipated effects on the installation and operation of the slide.

Load Factors

Alignment: Properly aligned slides run in a synchronized manner maintaining a simultaneous rate of extension upon opening and closing. Therefore, when the slides are aligned, racking does not occur and the smoother the drawer will operate.

Load Ratings: KV designates drawer slides in "Pound Class" categories and uses dynamic (rather than static) loading to determine load ratings. The "Pound Class" categories are used within the slide industry as general guidelines for drawer slide selection. These categories are not the same as actual load ratings. Load ratings vary based on slide length, application, and case goods construction. The categories provide a reference point in selecting which slide may fit a particular application. The Pound Class designations are not intended as a substitute for actual product testing. Proper slide selection may be significantly different from the Pound Class designation, depending on the application or other use factors. Representative testing of the selected drawer slide in the fully configured application is the only way to assure proper performance, durability, and safety.

Static Loads: A load is at rest - no motion. Static load capacity is higher than dynamic load capacity.

Dynamic Loads: A load in motion. Slides must withstand more forces when in motion than when still. Dynamic loads are the limiting factor affecting the life and performance of any slide.

Other factors affecting performance are:

- An even or uneven load distribution
- The number of cycles
- The speed or frequency of cycles
- The length of the cycle stroke
- The percent of travel
- The stopping force and distance

Abnormal Loads/Vibration: Shipping, abusive loads, and impact loads—even in short duration—put large stresses on the slide and can cause immediate or premature failure. Excessive or continuous vibrations can also reduce slide performance and life.

Corrosion: Excessive humidity, salts, or other chemical agents can corrode the finish and attack metal or plastic components. The effects may be immediate, or they may develop over time.

Lubrication: Knape & Vogt lubricates slides at the factory. However, contaminants such as dirt, filings, sawdust, paints, etc. can rapidly break down the effectiveness of the factory-applied lubricant.

Temperature: Extreme high or low temperatures can cause lubricants viscosity to change. Extreme temperatures caused by equipment such as finishing ovens can deteriorate a slide's plastic and rubber components.

Finishing: Over-spray from stains, paints, varnishes, or other finishing agents may degrade the quality of a slide's "fit and feel." These types of chemical agents can also attack plastic, rubber, and metal slide components. It's important to properly mask or otherwise protect installed slides before finishing furniture and cabinetry.

Proper slide choice and installation are keys to long and problem-free operation. KV strongly recommends that manufacturers test representative samples of the complete application. Appropriate industry standards should be followed to assure proper performance, durability, and safety.

**Drawer Racking: situation that occurs when uneven pull force is applied to the drawer slides which prevents the synchronized extension of the slides. The result is the drawer advancing with an uneven, side-to-side motion.*

Drawer Slides Quick Reference Guide

			Slide Type			Extension			Disconnect Type					Open/Close Features								
	Mounting Style	Load Class	Roller Bearing	Ball-Bearing	Undermount	3/4 Extension	Full Extension	1" Over Travel	No Disconnect	Friction Release	Lever Release	Lift Out	Quick Disconnect (QD Rail)	Hold In Anti-Rebound	Hold-Out / Open	Lock-In	Lock Open	Self-Close	Push-to-Open	Soft-Close	Shelf Tabs	V-Notch (Special Order)
Light-Duty Slides																						
1175	Under	50	•			•						•										
1300	Side	75	•			•					•				•							
1805	Side	75	•			•						•		•	•		•	•				
8350	Side	75		•		•					•			•								
4400	Side	65		•			•				•			•								
4450	Side	65		•			•				•									•		
700 Series	Under	66			•	•					•							•				
Medium-Duty Slides																						
800 Series	Under	88			•		•				•							•				
900 Series	Under	75			•		•				•			•						•		
8400	Side	100		•			•				•			•								
8405	Side	90		•				•			•			•								
8407	Side	100		•			•				•			•							•	
8414	Side	100		•			•				•			•	•							
8417	Side	100		•			•				•			•				•				
8419	Side	90		•				•			•			•				•				
8420	Side	100		•			•				•			•								
8425	Side	90		•				•			•			•								
8400RV	Side	100		•			•				•			•								
8450FM	Side	100		•			•				•			•						•		
8455FM	Side	90		•				•			•			•						•		
GS2070	Under	75			•		•				•			•						•		
GS4200	Side	100		•			•				•			•								
GS4205	Side	90		•				•			•			•								
GS4260	Side	100		•			•				•								•			
GS4270	Side	100		•			•				•									•		
TT100	Side	100		•			•				•			•								
DUR4500	Side	100		•			•				•			•								
Heavy-Duty Slides																						
6500	Side	125		•			•				•			•								
6505	Side	125		•				•			•			•								
8500	Side	150		•			•						•	•								
8505	Side	150		•				•					•	•								
8520	Side	175		•			•						•	•								
8525	Side	175		•				•					•	•								
8600	Side	150		•			•				•			•								
8605	Side	140		•				•			•			•								
8620	Side	150		•			•				•			•								
8625	Side	140		•				•			•			•								
8650FM	Side	150		•			•				•			•						•		
8655FM	Side	140		•				•			•			•						•		
8810	Side	200		•			•				•			•								
8815	Side	200		•				•			•			•								
8820	Side	200		•			•				•			•								
8825	Side	200		•				•			•			•								
8850FM	Side	200		•			•				•									•		
8900	Side	150-500		•			•		•					•								
8908	Side	150-500		•			•		•							•	•					
Specialty Slides																						
6300	Side	100		•			•				•			•								
6400	Side	100		•			•				•			•								
8000	Under	130		•				•				•		•								
8500T	Side	150		•			•						•	•								
8505T	Side	150		•				•					•	•								
8520T	Side	175		•			•						•	•								
8525T	Side	175		•				•					•	•								
4461D	Under	75		•																		
8150	Under	75		•		•					•			•	•							
8157	Under	75		•		•					•			•	•							
8250	Under	75		•		•					•			•								

Ball-Bearing Slides: Suggested Product Application Matrix

	Recommended Applications																							Available Stock Sizes																						
Part Number	Kitchen Cabinets	Bathroom Vanities	Desk & Credenza Box Drawers	Cabinetry	Mill Work	Lateral Files	Keyboard & Tray Units	Store Fixtures	Institutional Furniture	Fine Cabinetry	Wet/Corrosive Environments	Kitchen Pantries	Up & Over Hinge Doors	Entertainment Centers	Storage Cabinetry	Heavy-Duty Storage	Desk Trays	Pull-out Work Surfaces	Work Stations, Tool Storage	RV Vehicles, Mobile Carts	Automotive	Undermount Applications	Metal Cabinets and Drawers	8"	10"	12"	13"	14"	15"	16"	18"	20"	22"	24"	26"	28"	30"	32"	34"	36"	40"	42"	48"	60"	Special Order Only
4400	•	•	•	•																					•	•		•		•	•	•	•	•	•	•										
4450	•	•	•	•																					•	•		•		•	•	•	•	•												
6300											•														•	•		•		•	•	•	•	•	•	•										
6400											•														•	•		•		•	•	•	•	•	•	•										
6500			•					•	•																	•		•		•	•	•	•	•	•	•										
6505			•					•	•																	•		•		•	•	•	•	•	•	•										
8000												•														•		•		•	•	•	•	•	•	•										
8050EZ													•													•		•		•	•	•	•	•												
8070EZ														•	•											•		•		•	•	•	•	•												
8071EZ														•												•		•		•	•	•	•	•												
8072EZ														•												•		•		•	•	•	•	•												
8080EZ														•	•											•		•		•	•	•	•	•												
8081EZ														•	•											•		•		•	•	•	•	•												
8082EZ														•	•											•		•		•	•	•	•	•												
8091									•					•		•										•	•	•	•	•	•	•	•	•	•	•	•									
8092									•					•		•										•	•	•	•	•	•	•	•	•	•	•	•									
8150							•																					•		•	•	•														
8157							•																					•		•	•	•														
8250																	•								•	•		•		•	•	•	•													
8350			•	•	•																					•		•		•	•	•	•													
8400			•	•	•																			•	•	•		•		•	•	•	•	•	•	•										
8405			•	•	•																				•	•		•		•	•	•	•	•	•	•										
8407			•	•	•																				•	•		•		•	•	•	•	•	•	•										
8414																		•							•	•		•		•	•	•	•	•												
8417	•			•					•																	•		•		•	•	•	•	•	•											
8419	•			•					•																			•		•	•	•	•	•	•											
8420																							•							•	•	•	•													
8425																							•							•	•	•	•													
8400RV																				•					•	•		•		•	•	•	•	•	•	•										
8450FM			•	•	•																					•		•		•	•	•	•	•	•	•										
8455FM			•	•	•																									•	•	•	•	•	•	•										
8500			•	•	•																					•		•		•	•	•	•	•	•	•	•									
8505			•	•	•																					•		•		•	•	•	•	•	•	•	•									
8520			•			•																								•	•	•														
8525			•			•																								•	•	•														
8600			•	•	•			•	•						•	•			•							•		•		•	•	•	•	•	•	•										
8605								•	•						•	•			•							•		•		•	•	•	•	•	•	•										
8620																							•								•		•													
8625																							•																							•
8650FM				•				•	•						•	•			•									•		•	•	•	•	•	•	•										
8655FM				•				•	•						•	•			•												•	•	•	•	•	•										
8810				•	•			•								•									•	•		•		•	•	•	•	•	•	•										
8815				•	•			•								•										•		•		•	•	•	•	•	•	•										
8820																							•							•			•		•											
8825																							•																							•
8850FM				•	•			•								•										•		•		•	•	•	•	•	•	•										
8900																•			•		•				•	•		•		•	•	•	•	•	•	•	•	•	•	•	•	•	•	•	•	
8908																•			•	•	•					•		•		•	•	•	•	•	•	•	•	•	•	•	•	•	•	•	•	
GS4200			•	•	•																				•	•		•		•	•	•	•	•	•	•										
GS4205			•	•	•																				•	•		•		•	•	•	•	•	•	•										
GS4260	•			•					•																•	•		•		•	•	•	•	•	•	•										
GS4270			•	•	•																					•		•		•	•	•	•	•	•	•										
TT100			•	•	•																				•	•		•		•	•	•	•	•	•	•										
DUR4500			•	•	•																				•	•		•		•	•	•	•	•	•	•										

Roller Bearing Slides: Suggested Product Application Matrix

	Recommended Applications									Available Stock Sizes																		
Part Number	Kitchen Cabinets	Bathroom Vanities	Architectural Woodwork	Residential Furniture	Institutional Furniture	Office Furniture	Store Fixtures	Work Benches	Fine Cabinetry	Special Order Only	12"	14"	16"	18"	20"	22"	22-5/8"	24"	26"	28"	300mm	350mm	400mm	450mm	500mm	550mm	600mm	650mm
1175	•	•												•	•	•	•	•										
1300	•	•	•				•				•	•	•	•	•	•		•	•	•								
1805	•	•	•	•																	•	•	•	•	•	•	•	

Undermount Drawer Slide Size Guide

	Available Stock Sizes												
Part Number	9"	10"	12"	14"	15"	16"	18"	20"	21"	22"	24"	27"	30"
GS2070	•		•		•		•		•				
900 Series	•		•		•		•		•				
800 Series		•	•	•		•	•	•		•	•		
700 Series		•	•	•		•	•	•		•	•		

Download at www.kv.com > Resource Library

Light-Duty Drawer Slides

1175 3/4 Extension Center Under Drawer Slide. 8
1300 3/4 Extension Drawer Slides 9
1805 Epoxy-Coated Drawer Slide 10
8350 3/4 Extension Drawer Slides 11
4400 Low Profile Full Extension Drawer Slide 12
4450 Low Profile Full Extension Soft-Close Drawer Slide 13

			Type		Extension			Disconnect Type					Open/Close Features							
	Mounting Style	Load Class	Roller Bearing	Ball-Bearing	3/4 Extension	Full Extension	1" Over Travel	No Disconnect	Friction Release	Lever Release	Lift Out	Quick Disconnect	Hold In Anti-Rebound	Hold-Out / Open	Lock Open	Self-Close	Push-to-Open	Soft-Close	Shelf Tabs	V-Notch Special Order
1175	Under	50	•		•						•									
1300	Side	75	•		•					•				•						
1805	Side	75	•		•						•		•	•		•				
8350	Side	75		•	•					•			•							
4400	Side	65		•		•				•			•							
4450	Side	65		•		•				•			•					•		

1175 3/4 Extension Center Under Drawer Slide

Features

- Mounts with staples or screws
- Drawers lift out for easy removal
- Recommended maximum drawer width 18"

Mounting: Under-drawer
Action: Rollers
Load Rating: 50 lb. class
Height: 1" [25.4mm]
Finish: Zinc (ZC)

Configurations

Poly (P)	1 slide per bag with screws; 10 slides per carton
1175 Zinc (ZC) Finish	
Size	**Poly (P)**
22-5/8"	1175P ZC 22-5/8

Recommended Fasteners	KV Part	Finish	Qty
#6 x 1/2" Phillips Pan Head Screws	200106-5	Zinc (ZC)	1000

1300 3/4 Extension Drawer Slides

Features

- Positive stop lever
- Stay close design
- Recommended maximum drawer width 18"
- 3/4 extension slide

Mounting: Side
Action: Ball-bearing rollers
Load Rating: 75 lb. class
Height: 3" [76.2mm]
Clearance: .50" + .03" - 0" on each side
Finish: Zinc (ZC)

Profile:

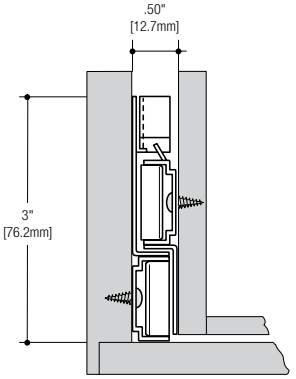

1300

Configurations

Bulk (B)	10 pairs per carton without screws	
Poly (P)	1 pair per bag with screws; 10 pairs per carton	
1300 Zinc (ZC) Finish		
12"	–	1300P ZC 12
14"	1300B ZC 14	1300P ZC 14
16"	1300B ZC 16	1300P ZC 16
18"	1300B ZC 18	1300P ZC 18
20"	1300B ZC 20	1300P ZC 20
22"	1300B ZC 22	1300P ZC 22
24"	1300B ZC 24	1300P ZC 24
26"	1300B ZC 26	1300P ZC 26
28"	–	1300P ZC 28

Recommended Fasteners	KV Part	Finish	Qty
#7 x 1/2" Phillips Pan Head Screws	8500-93	Zinc (ZC)	1000
	8500-93 EB	Ebony Black (EB)	1000

Non-stock item – minimum order quantities and additional lead time may apply.

Mounting Brackets

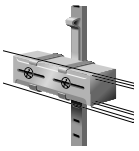

1303
Vertically Adjustable
Side-Mounting Bracket

Product	Pack
1303	100 per carton

1805 Epoxy-Coated Drawer Slide

Features

- 32mm mounting hole pattern
- Lift out disconnect
- Self-close design
- Recommended maximum drawer width 18"

Mounting: Side
Action: Rollers
Load Rating: 75 lb. class
Height: 1.39" [35.5mm]
Clearance: .50" + .03" - 0" on each side
Finish: White (WH)

Profile:

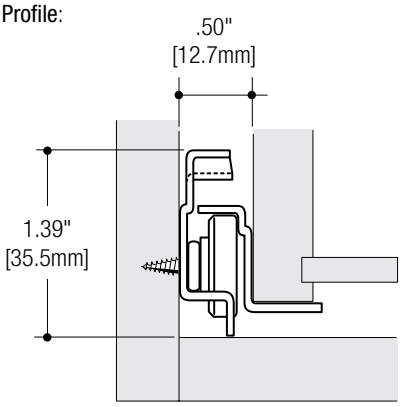

Configurations

Hefty (H)	1 pair per bag with screws; 20 pairs per carton		
Quantity (Q)	100 pairs per carton without screws; multiple cartons		
Taped Pair (T)	1 pair taped together without screws; 20 pairs per carton		
1805 White (WH) Finish			
300mm	1805H WH 300	1805Q WH 300	1805T WH 300
350mm	1805H WH 350	1805Q WH 350	1805T WH 350
400mm	1805H WH 400	1805Q WH 400	1805T WH 400
450mm	1805H WH 450	1805Q WH 450	1805T WH 450
500mm	1805H WH 500	1805Q WH 500	1805T WH 500
550mm	1805H WH 550	1805Q WH 550	1805T WH 550
600mm	1805H WH 600	1805Q WH 600	1805T WH 600

Mounting Brackets

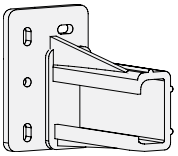

1805-101
Left and right handed sockets (2-3/8" socket)

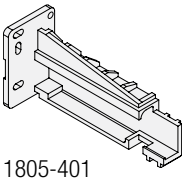

1805-401
Left and right handed sockets (4" socket)

Product	Pack	Handed
1805-101P	10 pairs per carton	Left/Right
1805-101L BP	50 eaches per carton	Left
1805-101R BP	50 eaches per carton	Right
1805-401L BP**	50 eaches per carton	Left
1805-401R BP**	50 per carton	Right

**

MADE IN USA

8350 3/4 Extension Drawer Slides

Features

- 32mm mounting hole pattern
- Lever disconnect permits easy drawer removal
- Non-handed design
- Recommended maximum drawer width 24"
- 3/4 extension drawer slide

Mounting: Side
Action: Ball-bearing movement
Load Rating: 75 lb. class
Height: 1.37" [35mm]
Clearance: .50" + .03" - 0" on each side
Finish: Anochrome (ANO)

Profile:

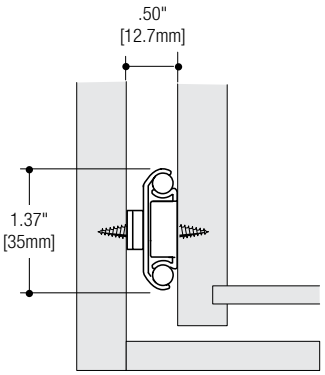

Configurations

Bulk (B)	10 pairs per carton without screws
8350 Anochrome (ANO) Finish	
Size	**Bulk (B)**
12"	8350B 12
14"	8350B 14
16"	8350B 16
18"	8350B 18
20"	8350B 20
22"	8350B 22

Recommended Fasteners	KV Part	Finish	Qty
#7 x 1/2" Phillips Pan Head Screws	8500-93	Zinc (ZC)	1000

Non-stock item – minimum order quantities and additional lead time may apply.

4400 Low Profile Full Extension Drawer Slide

Features

- Lever release
- Hold-in detent
- Recommended maximum drawer width 24"

Mounting: Side
Action: Telescopic movement on ball-bearings
Load Rating: 65 lb. class
Height: 1.42" [36mm]
Clearance: .50" + .03" - 0" on each side
Finish: Zinc (ZC)

Profile:

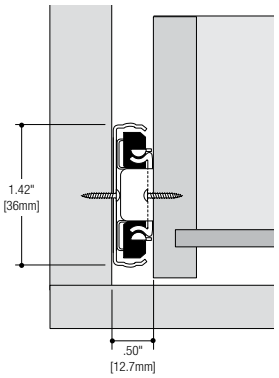

Configurations

Bulk (B)	10 pairs per carton without screws
4400 Zinc (ZC) Finish	
Size	**Bulk (B)**
10" (250mm)	4400B 10
12" (300mm)	4400B 12
14" (350mm)	4400B 14
16" (400mm)	4400B 16
18" (450mm)	4400B 18
20" (500mm)	4400B 20
22" (550mm)	4400B 22
24" (600mm)	4400B 24
26" (650mm)	4400B 26
28" (700mm)	4400B 28

Recommended Fasteners
#6 x 1/2" Truss Head Screws

Mounting Brackets

4101B
Rear Mounting Bracket

4104B
Front Face Frame Bracket

- Non-handed snap-on design

Product	Pack
4101B	20 per carton
4104B	20 per carton

4450 Low Profile Full Extension Soft-Close Drawer Slide

Features

- Lever release
- Soft-close module
- Recommended maximum drawer width 24"

Mounting: Side
Action: Soft-close
Load Rating: 65 lb. class
Height: 1.42" [36mm]
Clearance: .50" + .03" - 0" on each side
Finish: Zinc (ZC)

Profile:

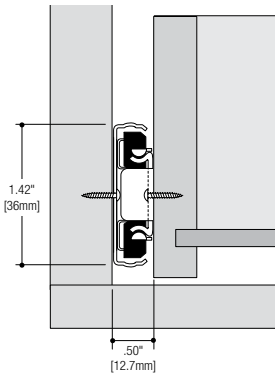

Mounting Brackets

4101B
Rear Mounting Bracket

4104B
Front Face Frame Bracket

- Non-handed snap-on design

Product	Pack
4101B	20 per carton
4104B	20 per carton

Configurations

Bulk (B)	10 pairs per carton without screws
4450 Zinc (ZC) Finish	
Size	**Bulk (B)**
10" (250mm)	4450B 10
12" (300mm)	4450B 12
14" (350mm)	4450B 14
16" (400mm)	4450B 16
18" (450mm)	4450B 18
20" (500mm)	4450B 20
22" (550mm)	4450B 22
24" (600mm)	4450B 24

Recommended Fasteners
#6 x 1/2" Truss Head Screws

Less than Full Extension: 10" = 7.8" Extension

Medium-Duty Drawer Slides

8400 Series Drawer Slides 15
8400 Full Extension Box or File Drawer Slide. 16
8405 Over Travel Box or File Drawer Slide. 17
8407 Full Extension Box or File Drawer Slide with Shelf Tabs 18
8414 Full Extension Hold-Out Precision Drawer Slide. 19
8417, 8419, 8400RV Self-Closing Drawer Slides 20
8420, 8425 Metal Cabinet and Drawer Slide. 21
8450FM, 8455FM Soft-Close Drawer Slide 22
KV GSlide® GS4200, GS4205 Drawer Slide. 23
KV GSlide® GS4260 Push-Open Drawer Slide 24
KV GSlide® GS4270 Soft-Close Drawer Slide 25
KV Tru-Trac® TT100 Full Extension Ball-Bearing Drawer Slide 26
KV DuriSlide™ 4500 Ball-Bearing Drawer Slide 27

			Type		Extension			Disconnect Type					Open/Close Features						
	Mounting Style	Load Class	Roller Bearing	Ball-Bearing	3/4 Extension	Full Extension	1" Over Travel	No Disconnect	Friction Release	Lever Release	Lift Out	Quick Disconnect	Hold In Anti-Rebound	Hold-Out / Open	Lock Open	Self-Close	Push-to-Open	Soft-Close	Shelf Tabs
8400	Side	100		•		•				•			•						
8405	Side	100		•			•			•			•						
8407	Side	100		•		•				•			•						•
8414	Side	100		•		•				•			•	•					
8417	Side	100		•		•				•			•			•			
8419	Side	90		•			•			•			•			•			
8420	Side	100		•		•				•			•						
8425	Side	90		•			•			•			•						
8400RV	Side	100		•		•				•			•			•			
8450FM	Side	100		•		•				•			•			•		•	
8455FM	Side	90		•			•			•			•			•		•	
GS4200	Side	100		•		•				•			•						
GS4205	Side	90		•		•				•			•						
GS4260	Side	100		•		•				•							•		
GS4270	Side	100		•		•				•								•	
TT100	Side	100		•		•				•			•						
DUR4500	Side	100		•		•				•			•						

8400 Series Drawer Slides

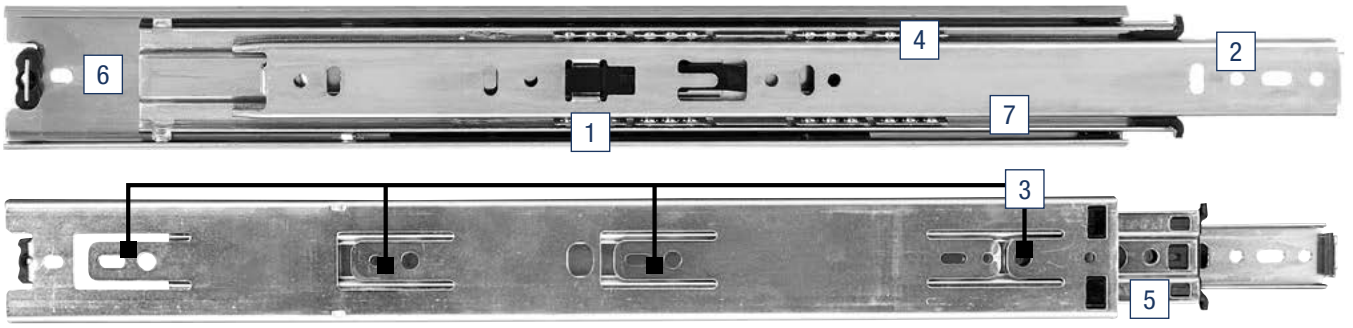

1. Push-in button for drawer disconnect is ergonomically designed for easy drawer removal.
2. Traditional and 32mm hole pattern supports industry standards for safely fastening slide in place.
3. Reversed flex tabs allow improved slide performance with side clearance tolerance adjustments.
4. Rolled ball-bearing raceway allows lateral loads to be carried by ball-bearings and not transferred to bushings sliding on metal.
5. Mounting hole is provided for face frame applications to eliminate the need for a separate bracket.
6. Access holes allow for drawer adjustments at full extension without removing drawer.
7. Lacquer finish provides superior corrosion resistance.

Self-Close Series Drawer Slides

Self-close slides use spring technology to close a drawer.

Models and Descriptions:

8417: Self-closing full extension
8419: Self-closing over travel drawer slide
8400RV: Heavy-duty self-closing full extension drawer slide

Features and Benefits:

- Self-close feature assist with the closing of a drawer and is fully integrated into the slide
- RV version has stronger springs to ensure closure in mobile applications

8450FM Soft-Close Drawer Slide

The KV8450FM series incorporates state-of-the-art soft-close technology. The fully integrated soft-close module brings drawer box to a smooth, quiet and secure closure.

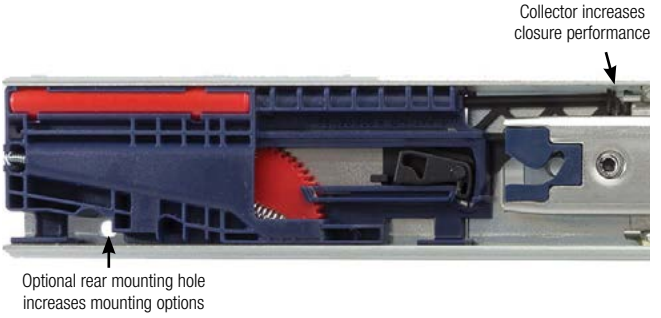

8450FM Series Features and Benefits

- Patented KV design incorporates dampening cylinder with balanced spring technology
- Soft-close module is fully integrated into an KV8400 style slide with same side clearance allowing cabinet makers to migrate directly to KV8450FM series products with no set up changes
- Exceeds KCMA, BHMA and BIFMA standards of performance: over 50,000 cycles including the soft-close module

8400 Full Extension Box or File Drawer Slide

Features

- 32mm hole pattern with direct access mounting
- Lever disconnect for easy drawer removal
- Non-handed design
- Recommended maximum drawer width 24"

Mounting: Side
Action: Telescopic movement on ball-bearings
Load Rating: 100 lb. class
Height: 1.79" [45.5mm]
Clearance: .50" + .03" - 0" on each side
Finish: Anochrome (ANO), Ebony Black (EB)

Profile:

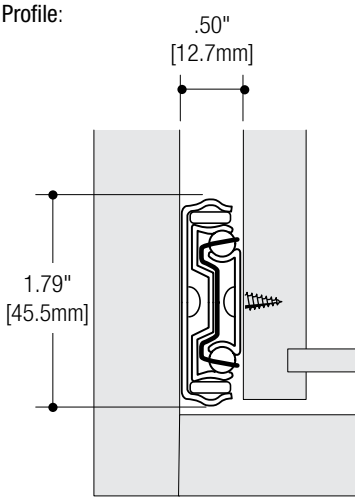

Mounting Brackets

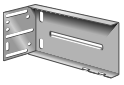
8401

8402

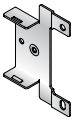
8404

Product	Front or Rear	Finish	Pack
8401	Rear	Zinc (ZC)	20 brackets/carton
8402	Rear	Zinc (ZC)	20 brackets/carton
8402BBL	Rear	Zinc (ZC)	400 brackets/carton
8402WP	Rear	Zinc (ZC)	20 brackets/warehouse pack
8404**	Front	Zinc (ZC)	20 brackets/carton
8404B**	Front	Zinc (ZC)	100 brackets/carton
8404 EB**	Front	Ebony Black (EB)	20 brackets/carton
8404BBL**	Front	Zinc (ZC)	400 brackets/carton
8404B KIT**	Both	Zinc (ZC)	2 [8403] + 2 [8404] + screws

**

Configurations

Bulk (B)	10 pairs per carton without screws
Poly (P)	1 pair per bag with screws; 10 pairs per carton
Quantity (Q)	50 pairs without screws; multiple cartons

Size	Bulk (B)	Poly (P)	Quantity (Q)
8400 Anochrome (ANO) Finish			
8"	8400B 8	8400P 8	8400Q 8
10"	8400B 10	8400P 10	8400Q 10
12"	8400B 12	8400P 12	8400Q 12
14"	8400B 14	8400P 14	8400Q 14
16"	8400B 16	8400P 16	8400Q 16
18"	8400B 18	8400P 18	8400Q 18
20"	8400B 20	8400P 20	8400Q 20
22"	8400B 22	8400P 22	8400Q 22
24"	8400B 24	8400P 24	8400Q 24
26"	8400B 26	8400P 26	8400Q 26
28"	8400B 28	8400P 28	8400Q 28
8400 Ebony Black (EB) Finish			
8"	8400B EB 8		
10"	8400B EB 10	8400P EB 10	8400Q EB 10
12"	8400B EB 12	8400P EB 12	8400Q EB 12
14"	8400B EB 14	8400P EB 14	8400Q EB 14
16"	8400B EB 16	8400P EB 16	8400Q EB 16
18"	8400B EB 18	8400P EB 18	8400Q EB 18
20"	8400B EB 20	8400P EB 20	8400Q EB 20
22"	8400B EB 22	8400P EB 22	8400Q EB 22
24"	8400B EB 24	8400P EB 24	8400Q EB 24
26"	8400B EB 26		8400Q EB 26
28"	8400B EB 28		8400Q EB 28
8400 White (WH) Finish			
8"	8400B WH 8		
10"	8400B WH 10		
12"	8400B WH 12		
14"	8400B WH 14		
16"	8400B WH 16		
18"	8400B WH 18		
20"	8400B WH 20		
22"	8400B WH 22		
24"	8400B WH 24		
26"	8400B WH 26		
28"	8400B WH 28		

Recommended Fasteners	KV Part	Finish	Qty
#7 x 1/2" Phillips Pan Head Screws	8500-93	Zinc (ZC)	1000
	8500-93 EB	Ebony Black (EB)	1000

Non-stock item – minimum order quantities and additional lead time may apply.

8405 Over Travel Box or File Drawer Slide

Features

- 1" over travel for full access to drawer contents
- Lever disconnect for easy drawer removal
- Non-handed design
- Recommended maximum drawer width 24"

Mounting: Side
Action: Telescopic action on ball-bearings
Load Rating: 100 lb. class
Height: 1.79" [45.5mm]
Clearance: .50" + .03" - 0" on each side
Finish: Anochrome (ANO), Ebony Black (EB)

Profile:

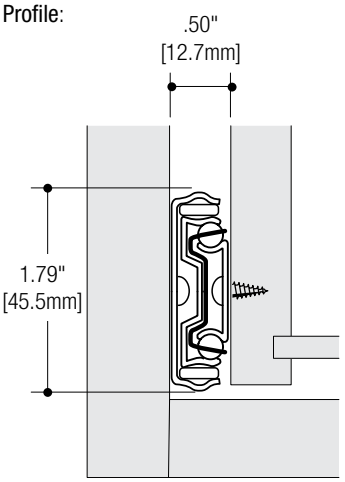

Mounting Brackets

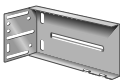
8401

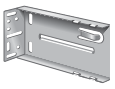
8402

8404

Product	Front or Rear	Finish	Pack
8401	Rear	Zinc (ZC)	20 brackets/carton
8402	Rear	Zinc (ZC)	20 brackets/carton
8402BBL	Rear	Zinc (ZC)	400 brackets/carton
8402WP	Rear	Zinc (ZC)	20 brackets/warehouse pack
8404**	Front	Zinc (ZC)	20 brackets/carton
8404B**	Front	Zinc (ZC)	100 brackets/carton
8404 EB**	Front	Ebony Black (EB)	20 brackets/carton
8404BBL**	Front	Zinc (ZC)	400 brackets/carton
8404B KIT**	Both	Zinc (ZC)	2 [8403] + 2 [8404] + screws

**

MADE IN USA

Configurations

WOODWORK INSTITUTE

MADE IN USA

Bulk (B)	10 pairs per carton without screws
Poly (P)	1 pair per bag with screws; 10 pairs per carton
Quantity (Q)	50 pairs without screws; multiple cartons

8405 Anochrome (ANO) Finish			
Size	**Bulk (B)**	**Poly (P)**	**Quantity (Q)**
10"	8405B 10	8405P 10	
12"	8405B 12	8405P 12	8405Q 12
14"	8405B 14	8405P 14	8405Q 14
16"	8405B 16	8405P 16	8405Q 16
18"	8405B 18	8405P 18	8405Q 18
20"	8405B 20	8405P 20	8405Q 20
22"	8405B 22	8405P 22	8405Q 22
24"	8405B 24	8405P 24	8405Q 24
26"	8405B 26	8405P 26	8405Q 26
28"	8405B 28	8405P 28	
8405 Ebony Black (EB) Finish			
10"	8405B EB 10	8405P EB 10	8405Q EB 10
12"	8405B EB 12	8405P EB 12	8405Q EB 12
14"	8405B EB 14	8405P EB 14	8405Q EB 14
16"	8405B EB 16	8405P EB 16	8405Q EB 16
18"	8405B EB 18	8405P EB 18	8405Q EB 18
20"	8405B EB 20	8405P EB 20	8405Q EB 20
22"	8405B EB 22	8405P EB 22	8405Q EB 22
24"	8405B EB 24	8405P EB 24	8405Q EB 24
26"	8405B EB 26	8405P EB 26	8405Q EB 26
28"	8405B EB 28	8405P EB 28	8405Q EB 28

Recommended Fasteners	KV Part	Finish	Qty
#7 x 1/2" Phillips Pan Head Screws	8500-93	Zinc (ZC)	1000
	8500-93 EB	Ebony Black (EB)	1000

Non-stock item – minimum order quantities and additional lead time may apply.

8407 Full Extension Box or File Drawer Slide with Shelf Tabs

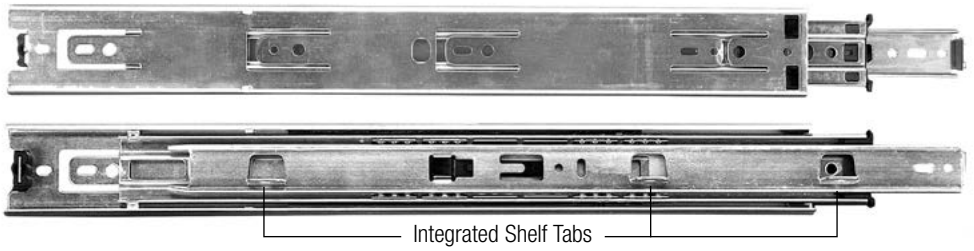

Tab Detail

Features

- 32mm hole pattern with direct access mounting
- Lever disconnect for easy drawer removal
- Integrated shelf tabs
- Recommended maximum drawer width 24"

Mounting: Side
Action: Telescopic movement on ball-bearings
Load Rating: 100 lb. class
Height: 1.79" [45.5mm]
Clearance: .50" + .03" - 0" on each side
Finish: Anochrome (ANO)

Profile:

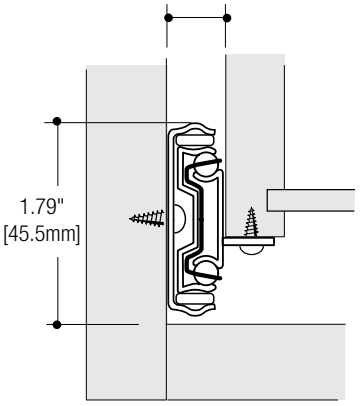

Configurations

Bulk (B)	10 pairs per carton without screws
Poly (P)	1 pair per bag with screws; 10 pairs per carton

8407 Anochrome (ANO) Finish		
Size	**Bulk (B)**	**Poly (P)**
10"	8407B 10	–
12"	8407B 12	–
14"	8407B 14	–
16"	8407B 16	8407P 16
18"	8407B 18	8407P 18
20"	8407B 20	8407P 20
22"	8407B 22	8407P 22
24"	8407B 24	–
26"	8407B 26	–
28"	8407B 28	–

Recommended Fasteners	KV Part	Finish	Qty
#7 x 1/2" Phillips Pan Head Screws	8500-93	Zinc (ZC)	1000

Non-stock item – minimum order quantities and additional lead time may apply.

Mounting Brackets

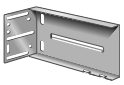
8401

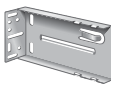
8402

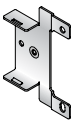
8404

Product	Front or Rear	Finish	Pack
8401	Rear	Zinc (ZC)	20 brackets/carton
8402	Rear	Zinc (ZC)	20 brackets/carton
8402BBL	Rear	Zinc (ZC)	400 brackets/carton
8402WP	Rear	Zinc (ZC)	20 brackets/warehouse pack
8404**	Front	Zinc (ZC)	20 brackets/carton
8404B**	Front	Zinc (ZC)	100 brackets/carton
8404 EB *	Front	Ebony Black (EB)	20 brackets/carton
8404BBL**	Front	Zinc (ZC)	400 brackets/carton
8404B KIT**	Both	Zinc (ZC)	2 [8403] + 2 [8404] + screws

**

8414 Full Extension Hold-Out Precision Drawer Slide

Features

- 32mm hole pattern with direct access mounting
- Lever disconnect for easy drawer removal
- Hold-out feature holds slide in place when drawer is open
- Recommended maximum drawer width 24"

Mounting: Side
Action: Telescopic movement on ball-bearings
Load Rating: 100 lb. class
Height: 1.79" [45.5mm]
Clearance: .50" + .03" - 0" on each side
Finish: Anochrome (ANO)

Profile:

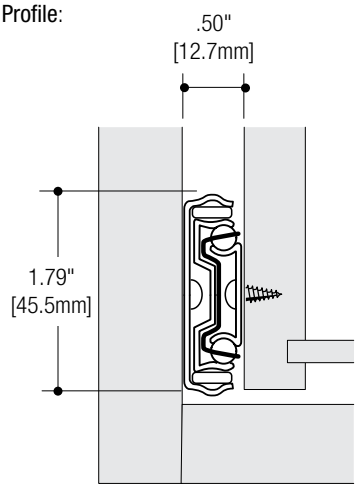

Configurations

Bulk (B)	10 pairs per carton without screws
Poly (P)	1 pair per bag with screws; 10 pairs per carton

8414 Anochrome (ANO) Finish		
Size	**Bulk (B)**	**Poly (P)**
10"	8414B 10	–
12"	8414B 12	8414P 12
14"	8414B 14	8414P 14
16"	8414B 16	8414P 16
18"	8414B 18	8414P 18
20"	8414B 20	8414P 20
22"	8414B 22	8414P 22
24"	8414B 24	8414P 24

Recommended Fasteners	KV Part	Finish	Qty
#7 x 1/2" Phillips Pan Head Screws	8500-93	Zinc (ZC)	1000

Non-stock item – minimum order quantities and additional lead time may apply.

Mounting Brackets

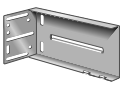
8401

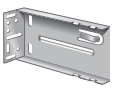
8402

8404

Product	Front or Rear	Finish	Pack
8401	Rear	Zinc (ZC)	20 brackets/carton
8402	Rear	Zinc (ZC)	20 brackets/carton
8402BBL	Rear	Zinc (ZC)	400 brackets/carton
8402WP	Rear	Zinc (ZC)	20 brackets/warehouse pack
8404**	Front	Zinc (ZC)	20 brackets/carton
8404B**	Front	Zinc (ZC)	100 brackets/carton
8404 EB**	Front	Ebony Black (EB)	20 brackets/carton
8404BBL**	Front	Zinc (ZC)	400 brackets/carton
8404B KIT**	Both	Zinc (ZC)	2 [8403] + 2 [8404] + screws

**

8417, 8419, 8400RV Self-Closing Drawer Slides

Features

- 32mm hole pattern with direct access mounting
- Self-closing feature
- 8400RV features a stronger spring for mobile applications
- Recommended maximum drawer width 24"

Extension: **8417:** Self-closing full extension drawer slide
8419: Self-closing 1" over travel drawer slide
8400RV: Heavy-Duty self-closing full extension drawer slide
Mounting: Side
Action: Telescopic movement on ball-bearings
Load Rating: 100 lb. class (8417/8400RV); 90 lb. class (8419)
Height: 1.79" [45.5mm]
Clearance: .50" + .03" - 0" on each side
Finish: Anochrome (ANO)

Profile:

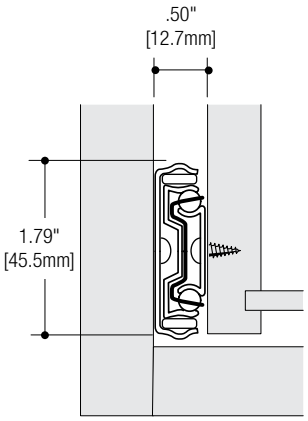

Configurations

Bulk (B)	10 pairs per carton without screws	
Poly (P)	1 pair per bag with screws; 10 pairs per carton	
8417 Anochrome (ANO) Finish		
Size	**Bulk (B)**	**Poly (P)**
12"	8417B 12	8417P 12
14"	8417B 14	8417P 14
16"	8417B 16	8417P 16
18"	8417B 18	8417P 18
20"	8417B 20	8417P 20
22"	8417B 22	8417P 22
24"	8417B 24	8417P 24
26"	8417B 26	8417P 26
8419 Anochrome (ANO) Finish		
14"	8419B 14	8419P 14
16"	8419B 16	8419P 16
18"	8419B 18	8419P 18
20"	8419B 20	8419P 20
22"	8419B 22	8419P 22
24"	8419B 24	8419P 24
26"	8419B 26	8419P 26
8400RV Anochrome (ANO) Finish		
10"	8400BRV 10	–
12"	8400BRV 12	–
14"	8400BRV 14	–
16"	8400BRV 16	–
18"	8400BRV 18	–
20"	8400BRV 20	–
22"	8400BRV 22	–
24"	8400BRV 24	–
26"	8400BRV 26	–
28"	8400BRV 28	–

Mounting Brackets

8403

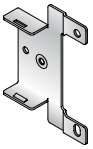
8404

Product	Front or Rear	Finish	Pack
8403	Rear	Zinc (ZC)	20 brackets/carton
8403BBL	Rear	Zinc (ZC)	400 brackets/carton
8404	Front	Zinc (ZC)	20 brackets/carton
8404B	Front	Zinc (ZC)	100 brackets/carton
8404 EB	Front	Ebony Black (EB)	20 brackets/carton
8404BBL	Front	Zinc (ZC)	400 brackets/carton
8404B KIT	Both	Zinc (ZC)	2 [8403] + 2 [8404] + screws

Non-stock item – minimum order quantities and additional lead time may apply.

8420, 8425 Metal Cabinet and Drawer Slide

Features

- Bayonet and Belt Loop Mount
- Lever disconnect for easy drawer removal
- Recommended maximum drawer width 24"

Extension: **8420:** Full Extension
8425: 1" Over Travel
Mounting: Side (Bayonet and Belt Loop)
Action: Telescopic action on ball-bearings
Load Rating: **8420:** 100 lb. class
8425: 90 lb. class
Height: 1.79" [45.5mm]
Clearance: .50" + .03" - 0" on each side
Finish: Anochrome (ANO), Ebony Black (EB)

Profile:

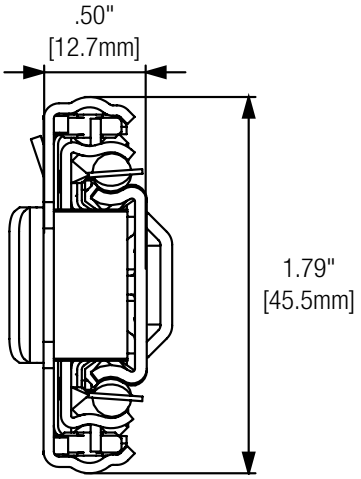

Configurations

MADE IN USA

Quantity (Q)	20 pairs without screws; multiple cartons
8420 Anochrome (ANO) Finish	
Size	**Quantity (Q)**
14"	8420Q 14
16"	8420Q 16
18"	8420Q 18
20"	8420Q 20
22"	8420Q 22
24"	8420Q 24
26"	8420Q 26
28"	8420Q 28
8420 Ebony Black (EB) Finish	
14"	8420Q EB 14
16"	8420Q EB 16
18"	8420Q EB 18
20"	8420Q EB 20
22"	8420Q EB 22
24"	8420Q EB 24
26"	8420Q EB 26
28"	8420Q EB 28
8425 Anochrome (ANO) Finish	
Size	**Quantity (Q)**
14"	8425Q 14
16"	8425Q 16
18"	8425Q 18
20"	8425Q 20
22"	8425Q 22
24"	8425Q 24
26"	8425Q 26
28"	8425Q 28
8425 Ebony Black (EB) Finish	
16"	8425Q EB 16
18"	8425Q EB 18
20"	8425Q EB 20
22"	8425Q EB 22
24"	8425Q EB 24
26"	8425Q EB 26
28"	8425Q EB 28

Non-stock item – minimum order quantities and additional lead time may apply.

8450FM, 8455FM Soft-Close Drawer Slide

Features

- Patented Force Management™ (FM) soft-close technology
- 32mm hole pattern with direct access mounting
- Lever disconnect for easy drawer removal
- Non-handed design
- Recommended maximum drawer width 24"

Extension: **8450FM:** Full extension
8455FM: 1" Over travel
Action: Telescopic movement on ball-bearings
Load Rating: **8450FM:** 100 lb. class
8455FM: 90 lb. class
Height: 1.79" [45.5mm]
Clearance: .50" + .03" - 0" on each side
Finish: Anochrome (ANO), Ebony Black (EB)

Profile:

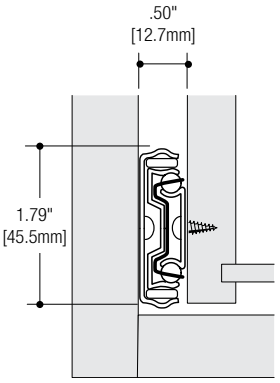

Patented Force Management™ (FM) soft-close technology

Mounting Brackets

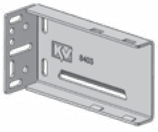

8403

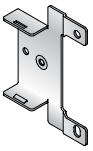

8404

Product	Front or Rear	Finish	Pack
8403	Rear	Zinc (ZC)	20 brackets/carton
8403BBL	Rear	Zinc (ZC)	400 brackets/carton
8404	Front	Zinc (ZC)	20 brackets/carton
8404B	Front	Zinc (ZC)	100 brackets/carton
8404 EB	Front	Ebony Black (EB)	20 brackets/carton
8404BBL	Front	Zinc (ZC)	400 brackets/carton
8404B KIT	Both	Zinc (ZC)	2 [8403] + 2 [8404] + screws

Configurations

Bulk (B)	10 pairs per carton without screws
Poly (P)	1 pair per bag with screws; 10 pairs per carton

Size	Bulk (B)	Poly (P)
8450FM Anochrome (ANO) Finish		
12"	8450FMB 12	8450FMP 12
14"	8450FMB 14	8450FMP 14
16"	8450FMB 16	8450FMP 16
18"	8450FMB 18	8450FMP 18
20"	8450FMB 20	8450FMP 20
22"	8450FMB 22	8450FMP 22
24"	8450FMB 24	8450FMP 24
26"	8450FMB 26	8450FMP 26
28"	8450FMB 28	8450FMP 28
8450FM Ebony Black (EB) Finish		
12"	–	–
14"	8450FMB EB 14	–
16"	8450FMB EB 16	–
18"	8450FMB EB 18	–
20"	8450FMB EB 20	–
22"	8450FMB EB 22	–
24"	8450FMB EB 24	–
26"	8450FMB EB 26	–
28"	8450FMB EB 28	–
8455FM Anochrome (ANO) Finish		
16"	8455FMB 16	8455FMP 16
18"	8455FMB 18	8455FMP 18
20"	8455FMB 20	8455FMP 20
22"	8455FMB 22	8455FMP 22
24"	8455FMB 24	8455FMP 24
26"	8455FMB 26	8455FMP 26
28"	8455FMB 28	8455FMP 28
8455FM Ebony Black (EB) Finish		
16"	8455FMB EB 16	–
18"	8455FMB EB 18	–
20"	8455FMB EB 20	–
22"	8455FMB EB 22	–
24"	8455FMB EB 24	–
26"	8455FMB EB 26	–
28"	8455FMB EB 28	–

Recommended Fasteners	KV Part	Finish	Qty
#7 x 1/2" Phillips Pan Head Screws	8500-93	Zinc (ZC)	1000
	8500-93 EB	Ebony Black (EB)	1000

Less than Full Extension: 12" = 10.2" Extension

Non-stock item – minimum order quantities and additional lead time may apply.

KV GSlide® GS4200, GS4205 Drawer Slide

Features

- 32mm hole pattern
- Lever disconnect for easy drawer removal
- Hold-in detent
- Non-handed design
- Recommended maximum drawer width 24"

Extension: **GS4200:** Full extension
GS4205: 1" Over travel
Mounting: Side
Action: Telescopic movement on ball-bearings
Load Rating: **GS4200:** 100 lb. class
GS4205: 90 lb. class
Height: 1.79" [45.5mm]
Clearance: .50" + .03" - 0" on each side
Finish: Zinc (ZC)

Profile:

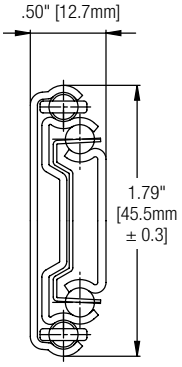

Configurations

Bulk (B)	10 Pair and 1 set of instructions per box without screws
GS4200 Zinc (ZC) Finish	
Size	**Bulk (B)**
250mm	GS4200 10
300mm	GS4200 12
350mm	GS4200 14
400mm	GS4200 16
450mm	GS4200 18
500mm	GS4200 20
550mm	GS4200 22
600mm	GS4200 24
650mm	GS4200 26
700mm	GS4200 28
GS4205 Zinc (ZC) Finish	
Size	**Bulk (B)**
250mm	GS4205 10
300mm	GS4205 12
350mm	GS4205 14
400mm	GS4205 16
450mm	GS4205 18
500mm	GS4205 20
550mm	GS4205 22
600mm	GS4205 24
650mm	GS4205 26
700mm	GS4205 28

Recommended Fasteners	KV Part	Finish	Qty
#7 x 1/2" Phillips Pan Head Screws	8500-93	Zinc (ZC)	1000

Mounting Brackets

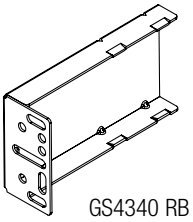

GS4340 RB

Product	Front or Rear	Finish	Pack
GS4340 RB	Rear	Zinc (ZC)	200

KV GSlide® GS4260 Push-Open Drawer Slide

Features

- Push-open feature holds a drawer or tray in the closed position until activated by a slight push
- 32mm hole pattern
- Lever disconnect for easy drawer removal
- Non-handed design
- Recommended maximum drawer width 24"

Mounting: Side
Action: Telescopic movement on ball-bearings
Load Rating: 100 lb. class
Height: 1.79" [45.5mm]
Clearance: .50" + .03" - 0" on each side
Finish: Zinc (ZC)

Profile:

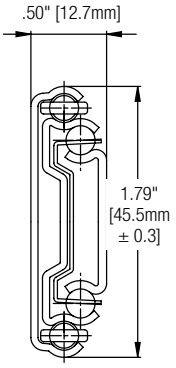

Configurations

Bulk (B)	10 Pair and 1 set of instructions per box without screws
GS4260 Zinc (ZC) Finish	
Size	**Bulk (B)**
250mm	GS4260 10
300mm	GS4260 12
350mm	GS4260 14
400mm	GS4260 16
450mm	GS4260 18
500mm	GS4260 20
550mm	GS4260 22
600mm	GS4260 24
650mm	GS4260 26
700mm	GS4260 28

Recommended Fasteners	KV Part	Finish	Qty
#7 x 1/2" Phillips Pan Head Screws	8500-93	Zinc (ZC)	1000

Mounting Brackets

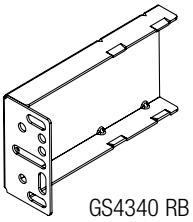

GS4340 RB

Product	Front or Rear	Finish	Pack
GS4340 RB	Rear	Zinc (ZC)	200

KV GSlide® GS4270 Soft-Close Drawer Slide

Features

- Soft-close module
- 32mm hole pattern
- Lever disconnect for easy drawer removal
- Non-handed design
- Recommended maximum drawer width 24"

Mounting: Side
Action: Telescopic movement on ball-bearings
Load Rating: 100 lb. class
Height: 1.79" [45.5mm]
Clearance: .50" + .03" - 0" on each side
Finish: Zinc (ZC)

Profile:

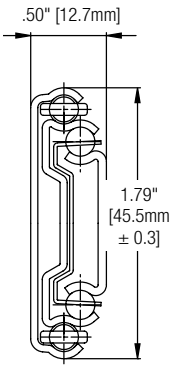

Mounting Brackets

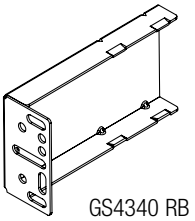

GS4340 RB

Product	Front or Rear	Finish	Pack
GS4340 RB	Rear	Zinc (ZC)	200

Configurations

Bulk (B)	10 Pair and 1 set of instructions per box without screws
GS4270 Zinc (ZC) Finish	
Size	**Bulk (B)**
300mm	GS4270 12
350mm	GS4270 14
400mm	GS4270 16
450mm	GS4270 18
500mm	GS4270 20
550mm	GS4270 22
600mm	GS4270 24
650mm	GS4270 26
700mm	GS4270 28

Recommended Fasteners	KV Part	Finish	Qty
#7 x 1/2" Phillips Pan Head Screws	8500-93	Zinc (ZC)	1000

Less than Full Extension: 12" = 8.4" Extension; 14" = 11.9" Extension

KV Tru-Trac® TT100 Full Extension Ball-Bearing Drawer Slide

Features

- For face framed and frameless construction
- 32mm and traditional hole pattern
- Lever disconnect for easy drawer removal
- Non-handed design
- Recommended maximum drawer width 24"

Mounting: Side
Action: Telescopic movement on ball-bearings
Load Rating: 100 lb. class
Height: 1.79" [45.5mm]
Clearance: .50" + .03" - 0" on each side
Finish: Zinc (ZC)

Profile:

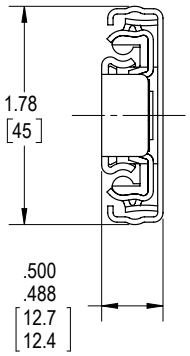

Mounting Brackets

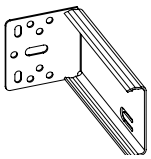

Product	Front or Rear	Finish	Pack
TT401A	Rear	Zinc (ZC)	200 (10 Inner Boxes of 20 Brackets) Pallet Qty: 7,200 each
TT401AB	Rear	Zinc (ZC)	200 (200 Loose Brackets) Pallet Qty: 7,200 each

Configurations

Bulk (B)	10 pairs per carton without screws
TT100 Zinc (ZC) Finish	
Size	**Bulk (B)**
250mm	TT100B 250
300mm	TT100B 300
350mm	TT100B 350
400mm	TT100B 400
450mm	TT100B 450
500mm	TT100B 500
550mm	TT100B 550
600mm	TT100B 600
650mm	TT100B 650
700mm	TT100B 700

Recommended Fasteners	KV Part	Finish	Qty
#7 x 1/2" Phillips Pan Head Screws	8500-93	Zinc (ZC)	1000

KV DuriSlide™ 4500 Ball-Bearing Drawer Slide

Features

- 32mm and traditional hole pattern
- Lever disconnect for easy drawer removal
- Non-handed design
- Recommended maximum drawer width 24"

Mounting: Side
Action: Telescopic movement on ball-bearings
Load Rating: 100 lb. class
Height: 1.79" [45.5mm]
Clearance: .50" + .03" - 0" on each side
Finish: Zinc (ZC)

Profile:

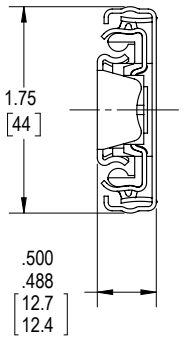

Configurations

Bulk (B)	10 pairs per carton without screws	
Quantity (Q)	20 cabinet members per carton, 100 drawer members per carton	
DUR4500 Zinc (ZC) Finish		
Size	**Bulk (B)**	**Quantity (Q)***
250mm	DUR45B 250	DUR45Q 250
300mm	DUR45B 300	DUR45Q 300
350mm	DUR45B 350	DUR45Q 350
400mm	DUR45B 400	DUR45Q 400
450mm	DUR45B 450	DUR45Q 450
500mm	DUR45B 500	DUR45Q 500
550mm	DUR45B 550	DUR45Q 550
600mm	DUR45B 600	DUR45Q 600
650mm	DUR45B 650	DUR45Q 650
700mm	DUR45B 700	DUR45Q 700

Recommended Fasteners	KV Part	Finish	Qty
#7 x 1/2" Phillips Pan Head Screws	8500-93	Zinc (ZC)	1000

* Drop Ship Full Container - full pallet quantities vary by size.

Mounting Brackets

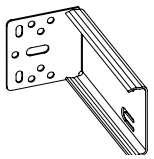

Product	Front or Rear	Finish	Pack
DUR45-RBKT	Rear	Zinc (ZC)	200 (10 Inner Boxes of 20 Brackets) Pallet Qty: 7,200 each
DUR45-RBKTB	Rear	Zinc (ZC)	200 (200 Loose Brackets) Pallet Qty: 7,200 each

Undermount Drawer Slides

KV GSlide® GS2070 Full Extension Undermount Drawer Slide 29
Smart Slide Full Fit Power 900 Series Undermount 30
Smart Slide Full Power 800 Series Undermount. 31
Smart Slide 700 Series Undermount. 32

			Type	Extension			Disconnect Type					Open/Close Features			
	Mounting Style	Load Class	Undermount	3/4 Extension	Full Extension	1" Over Travel	No Disconnect	Friction Release	Lever Release	Lift Out	Quick Disconnect	Hold In Anti-Rebound	Hold-Out / Open	Self-Close	Soft-Close
GS2070	Under	75	•		•				•			•			•
900 Series	Under	75	•		•				•						•
800 Series	Under	88	•		•				•						•
700 Series	Under	66	•	•					•						•

KV GSlide® GS2070 Full Extension Undermount Drawer Slide

Features

- Soft-close module
- For use with drawer material thickness from 1/2" to 5/8"
- 32mm hole pattern matches existing industry standards
- Full extension travel

Mounting: Undermount
Action: Telescopic action
Load Rating: 75 lb. class
Height: 1.80" [45.7mm]
Finish: Zinc (ZC)

Profile:

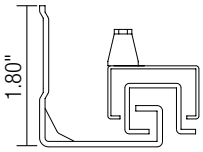

Configurations

Bulk (B)	6 pairs per carton without screws
2070 Zinc (ZC) Finish	
Size	**Bulk (B)**
12"	KVGS-2070AB 12
15"	KVGS-2070AB 15
18"	KVGS-2070AB 18
21"	KVGS-2070AB 21

Recommended Fasteners
#7 x 5/8" Flat Head Slide Mounting Screws
#7 x 3/4" Flat Head Front Mounting Clip Screws

Outside Drawer Width Calculation

Drawer Thickness	Deduct from Opening Width
5/8" [16mm]	3/8" [10mm]
9/16" [14mm]	9/16" [14mm]
1/2" [13mm]	5/8" [16mm]

Drawer Dimensions

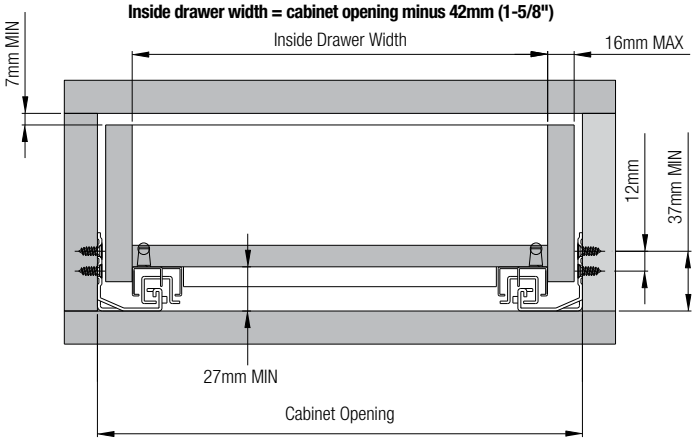

Mounting Brackets

2070-RBPA Plastic
Rear Mounting Bracket
All Lengths

2070-RBMA Metal
Rear Mounting Bracket
All Lengths

Product	Description	Carton Quantity
2070-RBPA	Plastic rear mounting brackets	60
2070-RBMA	Metal rear mounting brackets	60

Release Levers

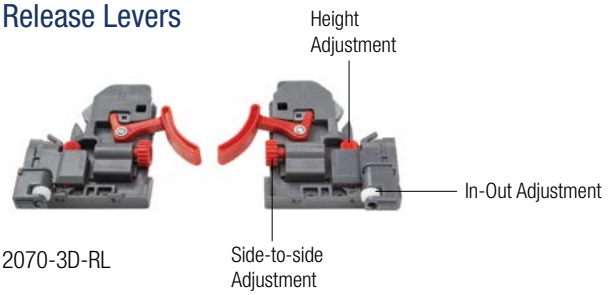

2070-3D-RL

Release Lever Adjustment

Part Number	Height	Side-to-Side	In-Out:	Carton Quantity
2070-3D-RL	+ 1/8" [3mm]	± 1/16" [1.5mm] from center or +3mm total	+ 1/8" [3mm]	30

Smart Slide Full Fit Power 900 Series Undermount

Features

- For use with drawer material thickness from 1/2" to 5/8"
- 32mm hole pattern matches existing industry standards
- Lever disconnect for easy drawer removal
- Handed design
- Recommended maximum drawer width 42"
- Minimum drawer width using narrow locks 9"
- Soft-Close with Full extension travel

Mounting: Undermount
Action: Synchronication
Load Rating: 75 lb. class
Height: 1.913" [48.6mm]
Finish: Zinc (ZC)

Profile:

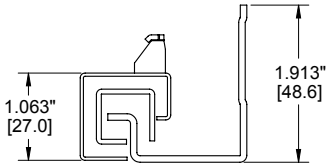

Configurations

Pack	6 pairs per carton
900 Series	
Size	**Part**
9"	KVSUMB 900 9
12"	KVSUMB 901 12
15"	KVSUMB 902 15
18"	KVSUMB 903 18
21"	KVSUMB 904 21

Recommended Fasteners
#6 x 5/8" Wood Screws

Drawer Dimensions

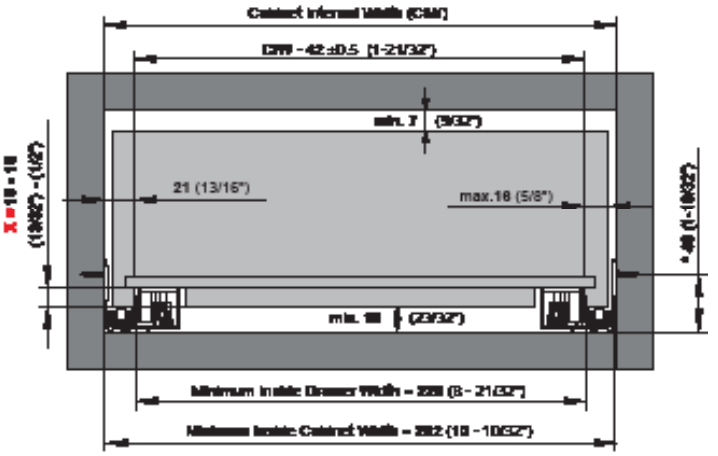

Mounting Brackets

KVSUMB B 102 Metal
Rear Mounting Bracket
All Lengths

Product	Description	Carton Quantity
KVSUMB B 102	Metal rear mounting brackets	180

Lock System

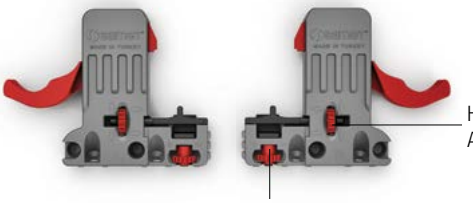

Smart 2D Lock System
±1,5 mm (1/16") side-to-side and ±2 mm (3/32") up/down

Part Number	Handed	Size	Carton Quantity
KVSUMB LR 105	Right	Standard	120
KVSUMB LL 106	Left	Standard	120
KVSUMB LRN 109	Right	Narrow	120
KVSUMB LLN 110	Left	Narrow	120

Smart Slide Full Power 800 Series Undermount

Features

- Adaptive Soft Close Mechanism
- Perfect Synchronised Movement
- 2D Adjustment
- Maximum Drawer Box Material Thickness: 3/4" (19mm)
- Smart Lock Front Locking Devices Sold Separately
- 25mm (1") Distance Brackets (Spacers) Available for Roll-Out Drawer Applications

Mounting: Undermount
Action: Synchronication
Load Rating: 88 lb. class
Height: 1.913" [48.6mm]
Finish: Zinc (ZC)

Profile:

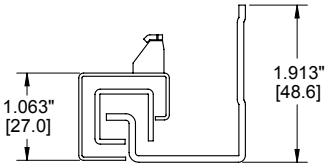

Configurations

Pack	6 pairs per carton
800 Series	
Size	**Part**
250mm	KVSUMB 800 10
300mm	KVSUMB 801 12
350mm	KVSUMB 802 14
400mm	KVSUMB 803 16
450mm	KVSUMB 804 18
500mm	KVSUMB 805 20
550mm	KVSUMB 806 22
600mm	KVSUMB 807 24

Recommended Fasteners
#6 x 5/8" Wood Screws

Drawer Dimensions

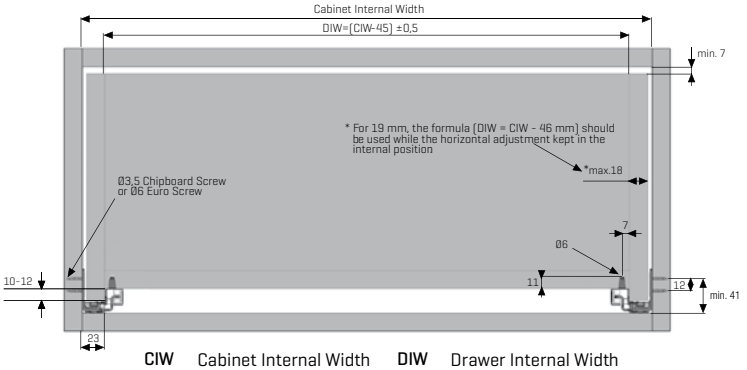

CIW Cabinet Internal Width **DIW** Drawer Internal Width

Mounting Brackets

Product	Description	Carton Quantity
KVSBBB 107	Drawer slide distance brackets 25mm Right	50
KVSBBB 108	Drawer slide distance brackets 25mm Left	50

Templates

KVSUMB DT 100

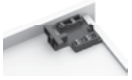

KVSUMB DT 101

Product	Description	Carton Quantity
KVSUMB DT 100	Drilling template	1
KVSUMB DT 101	Lock drilling template	10

Lock System

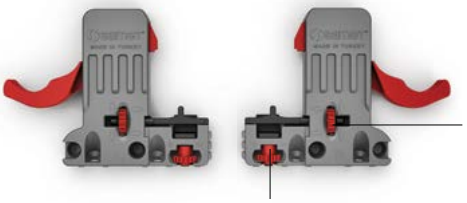

Smart 2D Lock System
±1,5 mm (1/16") side-to-side and ±2 mm (3/32") up/down

Part Number	Handed	Size	Carton Quantity
KVSUMB LR 105	Right	Standard	120
KVSUMB LL 106	Left	Standard	120
KVSUMB LRN 107	Right	Narrow	120
KVSUMB LLN 108	Left	Narrow	120

Smart Slide 700 Series Undermount

Features

- Adaptive Soft Close Mechanism
- Wide Range of Adjustment
- Soft Close Varieties
- 2D Adjustment
- Smart Lock Front Locking Devices Offer Tool-less Removal of Drawer Box
- Smart Lock Front Locking Devices Sold Separately

Mounting: Undermount
Action: Synchronication
Load Rating: 66 lb. class
Height: 1.654" [42.0mm]
Finish: Zinc (ZC)

Profile:

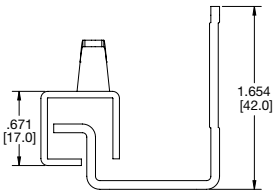

Configurations

Pack	12 pairs per carton
700 Series	
Size	**Part**
250mm	KVSUMB 700 10
300mm	KVSUMB 701 12
350mm	KVSUMB 702 14
400mm	KVSUMB 703 16
450mm	KVSUMB 704 18
500mm	KVSUMB 705 20
550mm	KVSUMB 706 22
600mm	KVSUMB 707 24

Recommended Fasteners
#6 x 5/8" Wood Screws

Drawer Dimensions

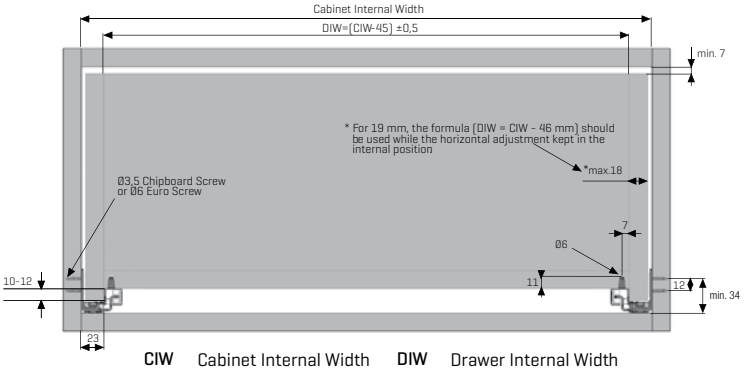

CIW Cabinet Internal Width **DIW** Drawer Internal Width

Mounting Brackets

Product	Description	Carton Quantity
KVSBBB 107	Drawer slide distance brackets 25mm Right	50
KVSBBB 108	Drawer slide distance brackets 25mm Left	50

Templates

KVSUMB DT 100

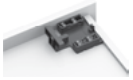

KVSUMB DT 101

Product	Description	Carton Quantity
KVSUMB DT 100	Drilling template	1
KVSUMB DT 101	Lock drilling template	10

Lock System

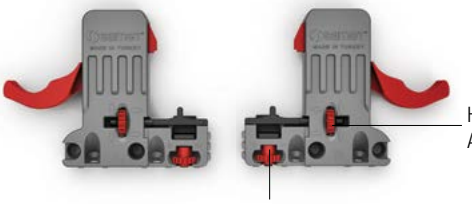

Smart 2D Lock System
±1,5 mm (1/16") side-to-side and ±2 mm (3/32") up/down

Part Number	Handed	Size	Carton Quantity
KVSUMB LR 105	Right	Standard	120
KVSUMB LL 106	Left	Standard	120
KVSUMB LRN 107	Right	Narrow	120
KVSUMB LLN 108	Left	Narrow	120

Heavy-Duty Drawer Slides

6500, 6505 Box or File Drawer Slide 34
8500, 8505 Heavy-Duty File or Lateral Drawer Slides 35
8520, 8525 Extra Heavy-Duty File or Lateral Drawer Slides 36
8600, 8605 Heavy-Duty Drawer Slide. 37
8620, 8625 Metal Cabinet and Drawer Slide. 38
8650FM, 8655FM Heavy-Duty Soft-Close Drawer Slide 39
8810, 8815 Heavy-Duty Drawer Slide. 40
8820, 8825 Heavy-Duty Metal Cabinet and Drawer Slide. 41
8850FM Heavy-Duty Soft-Close Drawer Slide 42
8900 Extra Heavy-Duty Full Extension Drawer Slide. 43
8908 Extra Heavy-Duty Full Extension Locking Drawer Slides. 44

			Type		Extension			Disconnect Type					Open/Close Features				
	Mounting Style	Load Class	Roller Bearing	Ball-Bearing	3/4 Extension	Full Extension	1" Over Travel	No Disconnect	Friction Release	Lever Release	Lift Out	Quick Disconnect	Hold In Anti-Rebound	Hold-Out / Open	Lock Open	Lock Closed	Soft-Close
6500	Side	125		•		•				•			•				
6505	Side	125		•			•			•			•				
8500	Side	150		•		•						•	•				
8505	Side	150		•			•					•	•				
8520	Side	175		•		•						•	•				
8525	Side	175		•			•					•	•				
8600	Side	150		•		•				•							
8605	Side	140		•			•			•							
8620	Side	150		•		•				•			•				
8625	Side	140		•			•			•			•				
8650FM	Side	150		•		•				•							•
8655FM	Side	140		•			•			•							•
8810	Side	200		•		•				•			•				
8815	Side	200		•			•			•			•				
8820	Side	200		•		•				•			•				
8825	Side	200		•			•			•			•				
8850FM	Side	200		•		•				•							•
8900	Side	150-500		•		•		•									
8908	Side	150-500		•		•		•							•	•	

6500, 6505 Box or File Drawer Slide

6500

6505

Features

- Lever disconnect for easy drawer removal
- Closed position hold-in detent
- Non-handed design
- Recommended maximum drawer width 30"

Extension: **6500:** Full Extension
6505: 1" Over Travel
Mounting: Side
Action: Telescopic movement on ball-bearings
Load Rating: **6500:** 125 lb. class
6505: 120 lb. class
Height: 1.95" [49.4mm]
Clearance: .50" + .03" - 0" on each side
Finish: Zinc (ZC)

Profile:

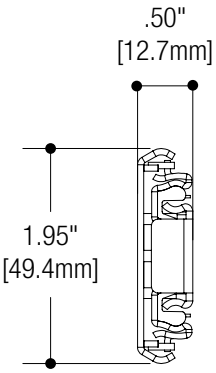

6500

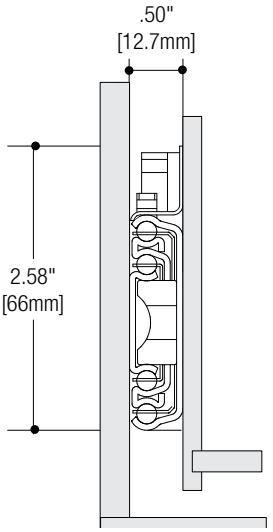

6505

Configurations

Bulk (B)	5 pairs per carton without screws
6500 Zinc (ZC) Finish	
Size	**Bulk (B)**
12"	6500B 12
14"	6500B 14
16"	6500B 16
18"	6500B 18
20"	6500B 20
22"	6500B 22
24"	6500B 24
26"	6500B 26
28"	6500B 28
6505 Zinc (ZC) Finish	
Size	**Bulk (B)**
12"	6505B 12
14"	6505B 14
16"	6505B 16
18"	6505B 18
20"	6505B 20
22"	6505B 22
24"	6505B 24
26"	6505B 26
28"	6505B 28

Recommended Fasteners
#7 x 1/2" Wood Screws

8500, 8505 Heavy-Duty File or Lateral Drawer Slides

Features

- 32mm hole pattern
- Non-handed quick disconnect drawer members
- Hold-in feature to prevent bounce back
- Recommended maximum drawer width
  8500: 36"
  8505: 30"

Extension: **8500**: Full extension
8505: 1.25" over travel
Mounting: Side
Action: Progressive movement on ball-bearings
Load Rating: 150 lb. class
Height: 3.79" [96.3mm] (includes quick disconnect rail)
Clearance: .50" + .03" - 0" on each side
Finish: Anochrome (ANO)

Profile:

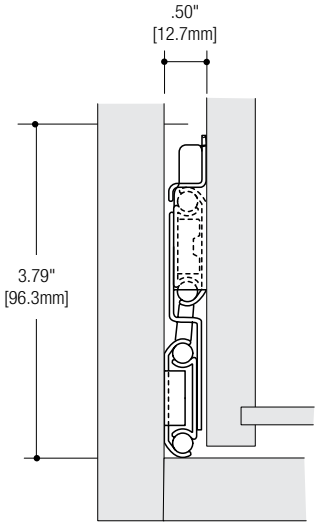

Configurations

Bulk (B)	5 pairs per carton without screws
Poly (P)	1 pair per bag with screws; 5 pairs per carton
Quantity (Q)	10 pairs without screws; multiple cartons

Size	Bulk (B)	Poly (P)	Quantity (Q)
8500 Anochrome (ANO) Finish			
12"	8500B 12	8500P 12	8500Q 12
14"	8500B 14	8500P 14	8500Q 14
16"	8500B 16	8500P 16	8500Q 16
18"	8500B 18	8500P 18	8500Q 18
20"	8500B 20	8500P 20	8500Q 20
22"	8500B 22	8500P 22	8500Q 22
24"	8500B 24	8500P 24	8500Q 24
26"	8500B 26	8500P 26	8500Q 26
28"	8500B 28	8500P 28	8500Q 28
30"	8500B 30	8500P 30	8500Q 30
8505 Anochrome (ANO) Finish			
12"	8505B 12	8505P 12	8505Q 12
14"	8505B 14	8505P 14	8505Q 14
16"	8505B 16	8505P 16	8505Q 16
18"	8505B 18	8505P 18	8505Q 18
20"	8505B 20	8505P 20	8505Q 20
22"	8505B 22	8505P 22	8505Q 22
24"	8505B 24	8505P 24	–
26"	8505B 26	8505P 26	–
28"	8505B 28	8505P 28	–
30"	8505B 30	8505P 30	–

Recommended Fasteners	KV Part	Finish	Qty
#7 x 1/2" Phillips Pan Head Screws	8500-93	Zinc (ZC)	1000

Non-stock item – minimum order quantities and additional lead time may apply.

8520, 8525 Extra Heavy-Duty File or Lateral Drawer Slides

Features

- 32mm hole pattern
- Non-handed quick disconnect drawer members
- Hold-in feature to prevent bounce back
- Recommended maximum drawer width
  8520: 42"
  8525: 36"

Extension: **8520**: Full extension
8525: 1.25" over travel
Mounting: Side
Action: Progressive movement on ball-bearings
Load Rating: 175 lb. class
Height: 3.79" [96.3mm] (includes quick disconnect rail)
Clearance: .50" + .03" - 0" on each side
Finish: Anochrome (ANO)

Profile:

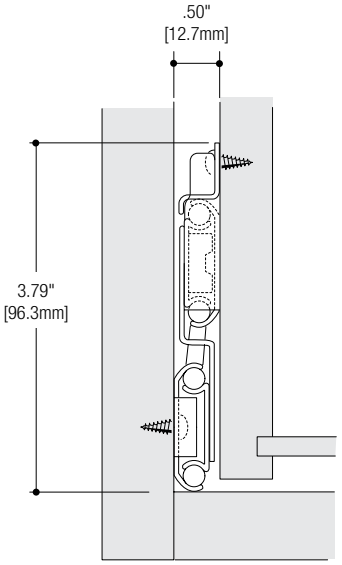

Configurations

Poly (P)	1 pair per bag with screws; 5 pairs per carton
8520 Anochrome (ANO) Finish	
Size	**Poly (P)**
16"	8520P 16
18"	8520P 18
20"	8520P 20
8525 Anochrome (ANO) Finish	
16"	8525P 16
18"	8525P 18
20"	8525P 20

Recommended Fasteners	KV Part	Finish	Qty
#7 x 1/2" Phillips Pan Head Screws	8500-93	Zinc (ZC)	1000

Non-stock item – minimum order quantities and additional lead time may apply.

8600, 8605 Heavy-Duty Drawer Slide

Features

- Butterfly lever disconnect
- Non-handed design
- Recommended maximum drawer width 36"

Extension: **8600**: Full Extension
8605: 1" Over Travel
Mounting: Side
Action: Telescopic movement on ball-bearings
Load Rating (based on application):
Load: **8600:** 150 lb. class
8605: 140 lb. class
Max. Drawer Width: 36"
Slides: 18"
Drawer Width: 36"
Cycles: 50,000 (center pull)
Load: **8600:** 200 lb.
8605: 190 lb.
Max. Drawer Width: 18"
Slides: 18"
Drawer Width: 18"
Cycles: 25,000 (center pull)
Height: 1.98" [50.4mm]
Clearance: .51" + .01"- 0" on each side
Finish: Zinc (ZC)

Profile:

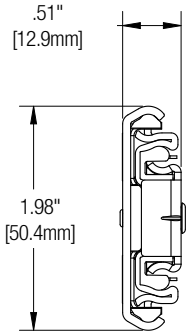

Configurations

Bulk (B)	5 pairs per carton without screws
8600 Zinc (ZC) Finish	
Size	**Bulk (B)**
12"	8600B 12
14"	8600B 14
16"	8600B 16
18"	8600B 18
20"	8600B 20
22"	8600B 22
24"	8600B 24
26"	8600B 26
28"	8600B 28
8605 Zinc (ZC) Finish	
Size	**Bulk (B)**
12"	8605B 12
14"	8605B 14
16"	8605B 16
18"	8605B 18
20"	8605B 20
22"	8605B 22
24"	8605B 24
26"	8605B 26
28"	8605B 28

Recommended Fasteners
#7 x 1/2" Truss Head Screws

8620, 8625 Metal Cabinet and Drawer Slide

Features

- Bayonet and Belt Loop Mount
- Lever disconnect for easy drawer removal
- Recommended maximum drawer width 36"

Extension: **8620:** Full Extension
8625: 1" Over Travel
Mounting: Side (Bayonet and Belt Loop)
Action: Telescopic action on ball-bearings
Load Rating: **8620:** 150 lb. class
8625: 140 lb. class
Height: 1.98" [50.4mm]
Clearance: .51" + .01" - 0" on each side
Finish: Zinc (ZC)

Profile:

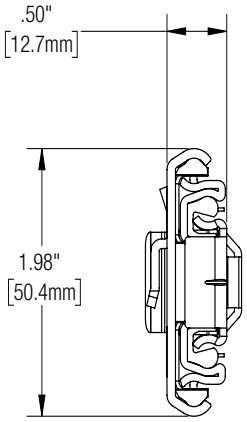

Configurations

Quantity (Q)	10 pairs; multiple cartons
8620 Zinc (ZC) Finish	
Size	**Quantity (Q)**
14"	8620Q 14
16"	8620Q 16
18"	8620Q 18
20"	8620Q 20
22"	8620Q 22
24"	8620Q 24
26"	8620Q 26
28"	8620Q 28
8625 Zinc (ZC) Finish	
Size	**Quantity (Q)**
14"	8625Q 14
16"	8625Q 16
18"	8625Q 18
20"	8625Q 20
22"	8625Q 22
24"	8625Q 24
26"	8625Q 26
28"	8625Q 28

Non-stock item – minimum order quantities and additional lead time may apply.

8650FM, 8655FM Heavy-Duty Soft-Close Drawer Slide

Features

- Patented Force Management (FM) Soft-Close Technology
- Butterfly lever disconnect
- Non-handed design
- Recommended maximum drawer width 36"

Extension: **8650FM**: Full Extension
8655FM: 1" Over Travel
Mounting: Side
Action: Telescopic movement on ball-bearings
Load Rating: **8650FM**: 150 lb. class
8655FM: 140 lb. class
Max. Drawer Width: 36"
Slides: 18"
Drawer Width: 36"
Cycles: 50,000 (center pull)
Height: 1.98" [50.4mm]
Clearance: .51" + .01"- 0" on each side
Finish: Zinc (ZC)

Profile:

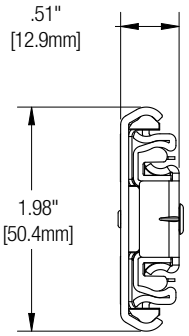

Configurations

Bulk (B)	5 pairs per carton without screws
8650 Zinc (ZC) Finish	
Size	**Bulk (B)**
14"	8650FMB 14
16"	8650FMB 16
18"	8650FMB 18
20"	8650FMB 20
22"	8650FMB 22
24"	8650FMB 24
26"	8650FMB 26
28"	8650FMB 28
8655 Zinc (ZC) Finish	
Size	**Bulk (B)**
18"	8655FMB 18
20"	8655FMB 20
22"	8655FMB 22
24"	8655FMB 24
26"	8655FMB 26
28"	8655FMB 28

Recommended Fasteners
#7 x 1/2" Truss Head Screws

14" and 16" less than full extension
14" extension = 11"; 16" extension = 15"

8810, 8815 Heavy-Duty Drawer Slide

Features

- Non-handed design for easy installation
- Closed-position hold-in detent
- Butterfly lever release
- Recommended maximum drawer width 42"

Extension: **8810:** Full Extension
8815: 1" Over Travel
Mounting: Side
Action: Telescopic movement on ball-bearings
Load Rating: **8810:** 200 lb. class
8815: 200 lb. class
• 100 lb. flat mount rating
Height: 2.09" [53mm]
Clearance: .765" + .02" - .01" on each side
Finish: Zinc (ZC)

Profile:

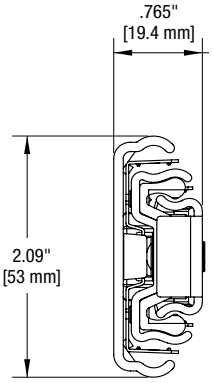

Configurations

Bulk (B)	4 pairs per carton without screws
8810 Zinc (ZC) Finish	
Size	**Bulk (B)**
10"	8810B 10
12"	8810B 12
14"	8810B 14
16"	8810B 16
18"	8810B 18
20"	8810B 20
22"	8810B 22
24"	8810B 24
26"	8810B 26
28"	8810B 28
8815 Zinc (ZC) Finish	
Size	**Bulk (B)**
12"	8815B 12
14"	8815B 14
16"	8815B 16
18"	8815B 18
20"	8815B 20
22"	8815B 22
24"	8815B 24
26"	8815B 26
28"	8815B 28

Recommended Fasteners
#8 or #10 x 5/8" Phillips Flathead Screws

8820, 8825 Heavy-Duty Metal Cabinet and Drawer Slide

Features

- Bayonet and Belt Loop Mount
- Lever disconnect for easy drawer removal
- Recommended maximum drawer width 42"

Extension: **8820:** Full Extension
8825: 1" Over Travel
Mounting: Side (Bayonet and Belt Loop)
Action: Telescopic action on ball-bearings
Load Rating: **8820:** 200 lb. class
8825: 200 lb. clas
Height: 2.09" [53mm]
Clearance: .765" + .02" - .01" on each side
Finish: Zinc (ZC)

Profile:

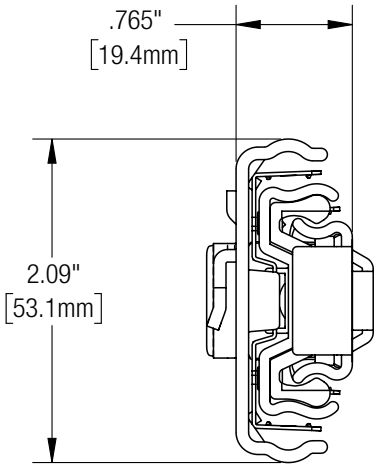

Configurations

Quantity (Q)	5 pairs; multiple cartons
8820 Zinc (ZC) Finish	
Size	**Quantity (Q)**
14"	8820Q 14
16"	8820Q 16
18"	8820Q 18
20"	8820Q 20
22"	8820Q 22
24"	8820Q 24
26"	8820Q 26
28"	8820Q 28
8825 Zinc (ZC) Finish	
Size	**Quantity (Q)**
14"	8825Q 14
16"	8825Q 16
18"	8825Q 18
22"	8825Q 22
24"	8825Q 24
26"	8825Q 26
28"	8825Q 28

Non-stock item – minimum order quantities and additional lead time may apply.

8850FM Heavy-Duty Soft-Close Drawer Slide

Features

- Patented Force Management (FM) Soft-Close Technology
- Butterfly lever disconnect
- Non-handed design
- Recommended maximum drawer width 42"

Extension: Full Extension
Mounting: Side
Action: Telescopic movement on ball-bearings
Load Rating: 200 lb. class
Height: 2.09" [53.2mm]
Clearance: .765" + .03"- 0"
Finish: Zinc (ZC)

Profile:

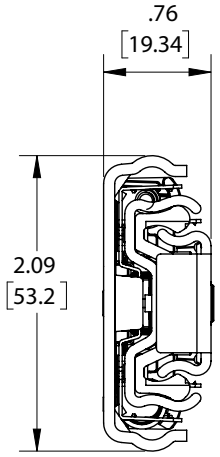

Configurations

Quantity (Q)	4 pairs per carton
8850FM Zinc (ZC) Finish	
Size	**Quantity (Q)**
12"	8850FMB 12
14"	8850FMB 14
16"	8850FMB 16
18"	8850FMB 18
20"	8850FMB 20
22"	8850FMB 22
24"	8850FMB 24
26"	8850FMB 26
28"	8850FMB 28

Download at www.kv.com > Resource Library

8900 Extra Heavy-Duty Full Extension Drawer Slide

Features

- Heavy-Duty stops are designed to withstand rough use
- Non-handed design for easy installation
- Full extension travel
- Non-disconnect

Mounting: Side
Action: Telescopic movement on ball-bearings
Load Rating: 100–500 lb. class depending on application
• 100 lb. flat mount rating
Height: 3" [76.2mm]
Clearance: .75" + .03" - 0" on each side
Finish: Zinc (ZC)

Profile:

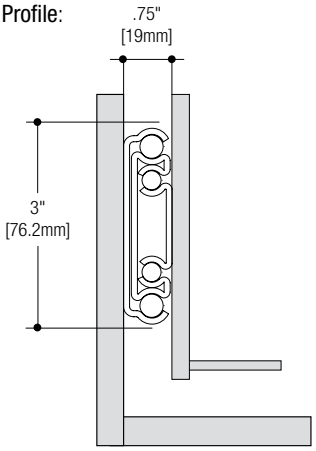

Configurations

Bulk (B)	10" – 20": 4 pairs per carton; 22" – 28": 3 pairs per carton 30" – 36": 2 pairs per carton; 40" – 60": 1 pair per carton
Poly (P)	10" – 20": 4 pairs per carton; 22" – 28": 3 pairs per carton 30" – 36": 2 pairs per carton

8900 Zinc (ZC) Finish

Size	Bulk (B)	Poly (P)
10"	8900B 10	8900P 10
12"	8900B 12	8900P 12
14"	8900B 14	8900P 14
16"	8900B 16	8900P 16
18"	8900B 18	8900P 18
20"	8900B 20	8900P 20
22"	8900B 22	8900P 22
24"	8900B 24	8900P 24
26"	8900B 26	8900P 26
28"	8900B 28	8900P 28
30"	8900B 30	8900P 30
32"	8900B 32	8900P 32
34"	8900B 34	8900P 34
36"	8900B 36	8900P 36
40"	8900B 40	–
42"	8900B 42	–
44"	8900B 44	–
48"	8900B 48	–
60"	8900B 60	–

Recommended Fasteners
1/4" [M6 Euro] flat, hex or pan head screw for 0.26" [6.6mm] cabinet member hole
1/4" [M6 Euro] hex or pan head screw for 0.26" [6.6mm] drawer member hole
#10 [M5 Euro] flat, hex or pan head screw for 0.20" [5.2mm] cabinet member hole
#10 [M5 Euro] hex or pan head screw for 0.20" [5.2mm] drawer member hole

Load Rating Chart

Load Rating	Test Condition	Open/Close Cycle Tested
500 lb.	18" slide in 18" width drawer	10,000
400 lb.	18" slide in 42" width drawer	30,000
300 lb.	18" slide in 36" width drawer	75,000
100 lb. flat load	18" slide in 32" width drawer	10,000

Note: This slide must never be used as a pull-out step, platform, or any other application supporting human weight as injury may result.

8908 Extra Heavy-Duty Full Extension Locking Drawer Slides

Features

- Automatic lock-in/lock-out feature
- Intuitive uni-directional release/closure
- Removable, ergonomic handle
- Spring-activated latches for vertical and horizontal mounting
- Non-disconnect

Extension: Extra Heavy-Duty full extension lock-in/lock-out slide
Mounting: Side or flat mount
Action: Telescopic movement on ball-bearings
Load Rating: 100–500 lb. class depending on application
• 100 lb. flat mount rating
Height: 3" [76.2mm]
Clearance: .75" + .03" - 0" on each side
Finish: Zinc (ZC)

Profile:

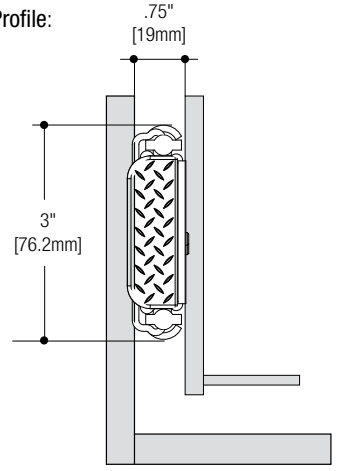

Configurations

Bulk (B)	10" – 20": 8 slides per carton without screws 22" – 28": 6 slides per carton without screws 30" – 36": 4 slides per carton without screws 40", 42", 44", 48", 60": 2 slides per carton without screws Each slide is poly-bagged with instructions included Sold per Each, not pair
8908 Zinc (ZC) Finish	
Size	**8908 Lock-in/Lock-out**
10"	–
12"	8908B 12
14"	8908B 14
16"	8908B 16
18"	8908B 18
20"	8908B 20
22"	8908B 22
24"	8908B 24
26"	8908B 26
28"	8908B 28
30"	8908B 30
32"	8908B 32
34"	8908B 34
36"	8908B 36
40"	8908B 40
42"	8908B 42
44"	8908B 44
48"	8908B 48
60"	8908B 60

Note: This slide must never be used as a pull-out step, platform, or any other application supporting human weight as injury may result.

Note: The 8908 slide is designed for applications in the 100 – 500 lb. class based on
application: modest use 500 lbs.; normal use 400 lbs.;
vehicular use 300 lbs.; flat mount 100 lbs..

Download at www.kv.com > Resource Library

Specialty Drawer Slides

6300 Corrosion Resistant Finish Drawer Slide 46
6400 Stainless Steel Drawer Slide 47
8000 Over Travel Undermount Pantry Drawer Slide 48
8500T Lateral File Drawer Systems 49

			Type		Extension			Disconnect Type					Open/Close Features					
	Mounting Style	Load Class	Roller Bearing	Ball-Bearing	3/4 Extension	Full Extension	1" Over Travel	No Disconnect	Friction Release	Lever Release	Lift Out	Quick Disconnect	Hold In Anti-Rebound	Hold-Out / Open	Lock Open	Self-Close	Push-to-Open	Soft-Close
6300	Side	100		•		•				•			•					
6400	Side	100		•		•				•			•					
8000	Under	130		•			•				•		•					
8500T	Side	150		•		•						•	•					

6300 Corrosion Resistant Finish Drawer Slide

Features

- Corrosion Resistant Finish - passes 100 hour salt spray test
- USDA H-1 approved grease
- 32mm hole pattern
- Lever disconnect for easy drawer removal
- Hold-in detent
- Non-handed design
- Recommended maximum drawer width 24"

Stainless Steel Components

- Ball-Bearing Retainer
- Ball-Bearings
- Release Lever Rivets
- Fasteners (included)

Mounting: Side
Action: Telescopic movement on ball-bearings
Load Rating: 100 lb. class
Height: 1.79" [45.5mm]
Clearance: .50" + .03" - 0" on each side
Finish: Corrosion Resistant (CR)

Profile:

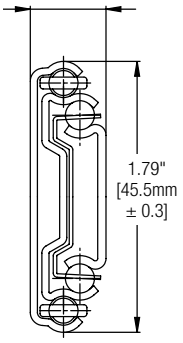

Configurations

Poly (P)	1 pair per bag with screws; 10 pair per carton
6300 Corrosion Resistant (CR) Finish	
Size	**Poly (P)**
250mm	6300P CR 10
300mm	6300P CR 12
350mm	6300P CR 14
400mm	6300P CR 16
450mm	6300P CR 18
500mm	6300P CR 20
550mm	6300P CR 22
600mm	6300P CR 24
650mm	6300P CR 26
700mm	6300P CR 28

Recommended Fasteners
#7 x 1/2" Stainless Steel Phillips Pan Head Screws

Mounting Brackets

Product	Front or Rear	Finish	Pack
6340 RB	Rear	Corrosion Resistant (CR)	10 pair/carton

6400 Stainless Steel Drawer Slide

Features

- 304-Grade stainless steel
- Ideal for use in wet or corrosive environments
- USDA H-1 approved grease
- Lever disconnect
- Recommended drawer width 24"

Mounting: Side
Action: Telescopic movement on ball-bearings
Load Rating: 100 lb. class
Height: 1.78" [45.2mm]
Clearance: .50" + .03" - 0" on each side
Finish: Stainless Steel (SS)

Profile:

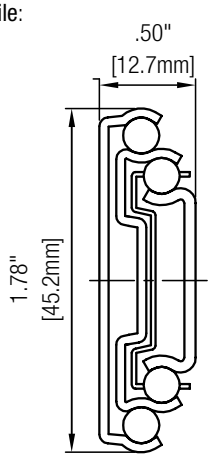

Configurations

Poly (P)	1 pair per bag with screws; 10 pairs per carton
6400 Stainless Steel (SS) Finish	
Size	**Poly (P)**
10"	6400P SS 10
12"	6400P SS 12
14"	6400P SS 14
16"	6400P SS 16
18"	6400P SS 18
20"	6400P SS 20
22"	6400P SS 22
24"	6400P SS 24
26"	6400P SS 26
28"	6400P SS 28

Recommended Fasteners
#8 x 1/2" Stainless Steel Pan Head Screws

Mounting Brackets

Product	Front or Rear	Finish	Pack
6340 RB	Rear	Corrosion Resistant (CR)	10 pair/carton

8000 Over Travel Undermount Pantry Drawer Slide

Removable
Mounting Brackets

Features

- Removable mounting brackets
- Hold-in detent
- Key-hole style mounting holes
- 1" over travel

Mounting: Bottom mount
Action: Telescopic movement on ball-bearings
Load Rating: 130 lb. class
Height: 1.54" [39mm]
2.25" [57mm] (includes brackets)
Clearance: 3/4" (slide only); 2-1/4" (with brackets)
Finish: Anochrome (ANO)

Profile:

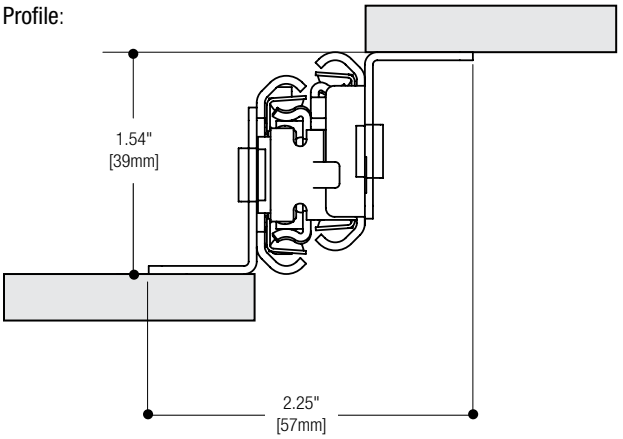

Configurations

Poly (P)	1 pair per bag with screws; 5 pairs per carton
8000 Anochrome (ANO) Finish	
Size	**Poly (P)**
12"	8000P 12
14"	8000P 14
16"	8000P 16
18"	8000P 18
20"	8000P 20
22"	8000P 22
24"	8000P 24
26"	8000P 26
28"	8000P 28

Recommended Fasteners	KV Part	Finish	Qty
#8 x 5/8" Phillips Pan Head Screws	200114-6	Zinc (ZC)	1000

8500T Lateral File Drawer Systems

Features

- Patented integrated I-LOCK (anti-tilt) mechanism
- Uses high-strength cable that laces through the drawer slides and snaps into place, allowing only one drawer to open at a time
- Accommodates drawers on 12" (±1/2") vertical centers
- Non-handed quick disconnect rail
- Designed for use on lateral file applications where a drawer anti-tilt feature is needed
- Full extension slide with maximum 36" drawer width

Mounting: Side
Action: Progressive movement on ball-bearings
Load Rating: 150 lb. class
Height: 5.15" [131mm]
Clearance: .50" + .03" - 0" on each side
Finish: Anochrome (ANO)

Profile:

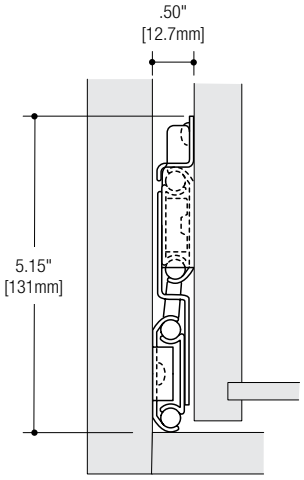

Configurations

Quantity (Q)	20 pairs without screws; multiple cartons
8500T Anochrome (ANO) Finish	
Special Order Only	
8520T	Special Order
8525T	Special Order

Recommended Fasteners	KV Part	Finish	Qty
#7 x 1/2" Phillips Pin Head Screws	8500-93	Zinc (ZC)	1000

8500 Interlok™ Cable Accessory

Required for 8500T Interlok anti-tilt systems.

Product	Size	Packed
8500T-11B 482	For 2-high lateral files	40 per carton
8500T-11B 789	For 3-high lateral files	40 per carton
8500T-11B 1095	For 4-high lateral files	40 per carton

Note: Custom length cables are available as special order. Consult Customer Service for information and availability.

Overhead Door and Desk Slides

8150, 8157 3/4 Extension Variable Height Keyboard Slide 51
8250 3/4 Extension Variable Height Pencil or Center Drawer Slide . . . 52
8050 Hinged Door Slide 53

			Type	Extension				Disconnect Type					Open/Close Features						
	Mounting Style	Load Class	Ball-Bearing	5/8 Extension	3/4 Extension	Full Extension	1" Over Travel	No Disconnect	Friction Release	Lever Release	Lift Out	Quick Disconnect	Hold In Anti-Rebound	Hold-Out / Open	Lock Open	Self-Close	Push-to-Open	Soft-Close	Shelf Tabs
8150	Under	75	•		•					•			•	•					
8157	Under	75	•		•					•			•	•					•
8250	Under	75	•		•					•			•						
8050	Under	20	•																

8150, 8157 3/4 Extension Variable Height Keyboard Slide

Features

- Mounting brackets adjust to seven different heights and can be reversed for in-board/out-board mounting
- Track member quickly disconnects using positive lever release, easing installation
- Hold-out feature keeps drawer securely in the open position
- Hold-in feature prevents keyboard tray bounce back
- Recommended maximum drawer width 24"

Extension: **8150:** 3/4 extension keyboard slide
8157: 3/4 extension keyboard slide with shelf tabs
Mounting: Under surface
Action: Ball-bearing movement
Load Rating: 75 lb. class
Height: Overall drop height adjusts from 2.34" [59.4mm] to 3.68" [93.5mm] in 7/32" increments
Clearance: 1.62" [41mm] per side out-board
.62" [15.7mm] per side in-board
Finish: Anochrome (ANO), Ebony Black (EB)

Profile:

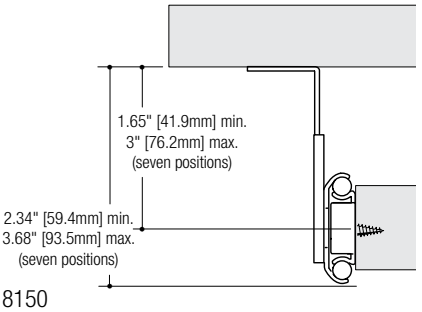

8150

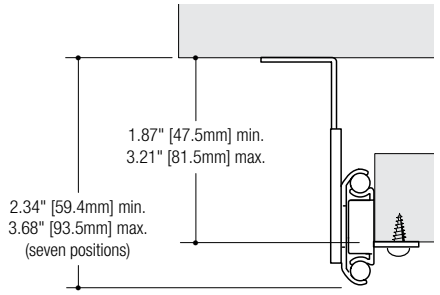

8157

Configurations

Poly (P)	1 pair per bag with screws; 10 pairs per carton
8150 Anochrome (ANO) Finish	
Size	**Poly (P)**
14"	8150P 14
16"	8150P 16
18"	8150P 18
20"	8150P 20
8150 Ebony Black (EB) Finish	
12"	8150P EB 12
14"	8150P EB 14
16"	8150P EB 16
18"	8150P EB 18
20"	8150P EB 20
8157 Anochrome (ANO) Finish	
14"	8157P 14
16"	8157P 16
18"	8157P 18
20"	8157P 20
8157 Ebony Black (EB) Finish	
14"	8157P EB 14
16"	8157P EB 16
18"	8157P EB 18

Recommended Fasteners	KV Part	Finish	Qty
#7 x 1/2" Phillips Pan Head Screws	8500-93	Zinc (ZC)	1000

Non-stock item – minimum order quantities and additional lead time may apply.

8250 3/4 Extension Variable Height Pencil or Center Drawer Slide

Features

- Mounting brackets adjust to seven heights and can be reversed for in-board and out-board mounting
- Anti-rebound stay-close design holds pencil drawer in closed position yet allows for easy opening
- Track member quickly disconnects using positive lever releases
- Recommended maximum drawer width 24"

Mounting: Under surface
Action: Ball-bearing movement
Load Rating: 75 lb. class
Height: Overall drop height 2.34" [59.4mm] to 3.68" [93.5mm] in 7/32" increments
Clearance: 1.62" [41mm] per side out-board
.53" [13.5mm] per side in-board
Finish: Anochrome (ANO)

Profile:

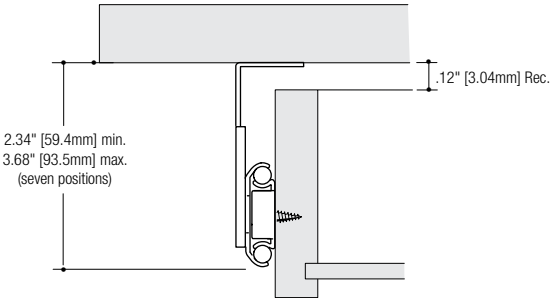

Configurations

Poly (P)	1 pair per bag with screws; 10 pairs per carton
8250 Anochrome (ANO) Finish	
Size	**Poly (P)**
10"	8250P 10
12"	8250P 12
14"	8250P 14
16"	8250P 16
18"	8250P 18
20"	8250P 20
22"	8250P 22

Recommended Fasteners	KV Part	Finish	Qty
#7 x 1/2" Phillips Pan Head Screws	8500-93	Zinc (ZC)	1000

Non-stock item – minimum order quantities and additional lead time may apply.

8050 Hinged Door Slide

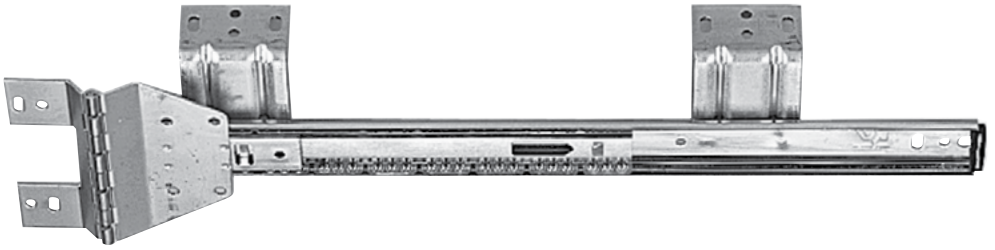

Features

- One-piece, non-marring roller
- Permanently staked hinge pin

Mounting: Under surface
Action: Ball-bearing movement
Load Rating: 20 lb. class
Clearance: 1.31" [33.3mm] minimum
Finish: Anochrome (ANO)

Profile:

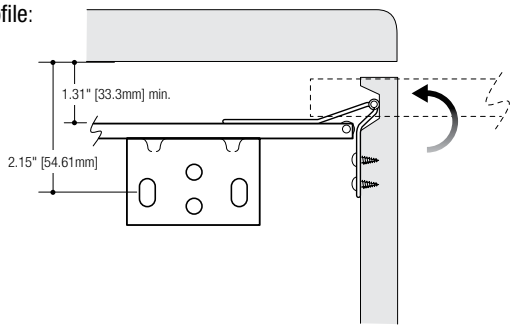

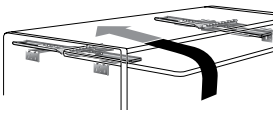

Up and under application

Configurations

Poly (P)	1 pair per bag with screws; 10 pairs per carton
8050 Anochrome (ANO) Finish	
Size	**Poly (P)**
12"	8050PEZ 12
14"	8050PEZ 14
16"	8050PEZ 16
18"	8050PEZ 18
20"	8050PEZ 20
22"	8050PEZ 22
24"	8050PEZ 24

Recommended Fasteners	KV Part	Finish	Qty
#7 x 1/2" Phillips Pan Head Screws	8500-93	Zinc (ZC)	1000

Non-stock item – minimum order quantities and additional lead time may apply.

Door Slides and Hinge Kits

8070, 8071, 8072 Pivot Door Slides. 55
8080, 8081, 8082 Pivot Door Slides. 56
8091, 8092 Pivot Door Slides 57
4x4 Pocket Door Full Overlay Kit. 58
KV Pocket Door Hinge Kits 59

8070, 8071, 8072 Pivot Door Slides

Features

- Cabinet acts as installation jig
- Cushioned stops and door hold-out
- Three-way adjustable door hinge

Extension: **8070:** 3/4 extension slide with self-close 35mm hinge
8071: 3/4 extension slide without hinge and base
8072: 3/4 extension slide with included hinge base

Mounting: Side

Action: Ball-bearing movement

Load Rating: 30 lb. class

Maximum Dimensions: Vertical doors: 42" high x 24" wide
Horizontal pivot doors: 24" high x 48" wide

Clearance:

Maximum Slide Width Including Hinges		
Type	**Standard**	**KV**
Self-close hinge	1-23/32"	1-21/32"
Free-swing hinge	1-23/32"	1-21/32"
Overlay hinge	1-23/32"	1-7/8"
Thick door hinge	2-3/32"	–
Extra-thick door hinge	2-13/32"	2-5/16"

Finish: Ebony Black (EB)

Profile:

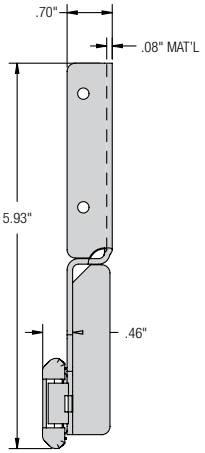

8090P CR Raised Panel Cassette Roller

Additional protection for raised panel doors

Product	Pack
8090P CR	1 per poly pack with screws; 20 per carton

Configurations

Poly (P)	1 pair per bag with screws; 10 pairs per carton				
8070EZ Ebony Black (EB)		**8071EZ Ebony Black (EB)**		**8072EZ Ebony Black (EB)**	
Includes standard 3/4 inset hinge and baseplate		Hinges and baseplates are not included		Baseplate included; Must order hinges separately	
Size	**Poly (P)**	**Size**	**Poly (P)**	**Size**	**Poly (P)**
12"	8070PEZ EB 12	12"	8071PEZ EB 12	12"	8072PEZ EB 12
14"	8070PEZ EB 14	14"	8071PEZ EB 14	14"	8072PEZ EB 14
16"	8070PEZ EB 16	16"	8071PEZ EB 16	16"	8072PEZ EB 16
18"	8070PEZ EB 18	18"	8071PEZ EB 18	18"	8072PEZ EB 18
20"	8070PEZ EB 20	20"	8071PEZ EB 20	20"	8072PEZ EB 20
22"	8070PEZ EB 22	22"	8071PEZ EB 22	22"	8072PEZ EB 22
24"	8070PEZ EB 24	24"	8071PEZ EB 24	24"	8072PEZ EB 24

Recommended Fasteners	KV Part	Finish	Qty
#6 x 13/32" Phillips Pan Head Screws	1300-83	Zinc (ZC)	1000

Hinge Kit Options

Hinge Kit (K)	2 hinges per kit; 10 kits per carton		
Mepla Nickel Hinges (For Use with 8072)			
Kit (K)	**Hinge Cup Size**	**Door Thickness**	**Application**
8080 HKEZS	35 mm	3/4"	Inset
8080 HKEZL	40 mm	3/4"	Partial Overlay
8080 HKEZF	35 mm	3/4"	Inset - Free Swing
8085 HKEZT	40 mm	1"	Inset - Thick Door
8086 HKEZX	40 mm	1-1/4"	Inset - Extra Thick Door
Mepla Ebony Black (EB) Hinges (For Use with 8072)			
Kit (K)	**Hinge Cup Size**	**Door Thickness**	**Application**
8080 HKEZSEB	35 mm	3/4"	Inset
8080 HKEZLEB	40 mm	3/4"	Partial Overlay
8085 HKEZTEB	40 mm	1"	Inset - Thick Door
8086 HKEZXEB	40 mm	1-1/4"	Inset - Extra Thick Door

KV Hinges (For Use with 8071) Nickel Finish (hinge base included)			
Kit (K)	**Hinge Cup Size**	**Door Thickness**	**Application**
8080 HKS SAL	35 mm	3/4"	Inset
8080 HKF SAL	35 mm	3/4"	Inset - Free Swing
8080 HKL SAL	40 mm	3/4"	Partial Overlay
8086 HKX SAL	40 mm	1-1/4"	Inset - Thick Door
KV Hinges (For Use with 8071) Ebony Black (EB) Finish (hinge base included)			
Kit (K)	**Hinge Cup Size**	**Door Thickness**	**Application**
8080 HKS SAL EB	35 mm	3/4"	Inset
8080 HKL SAL EB	40 mm	3/4"	Partial Overlay
8086 HKX SAL EB	40 mm	1-1/4"	Inset - Thick Door

For additional information on our KV hinge offerings please see page 59.

8080, 8081, 8082 Pivot Door Slides

Features

- Cushioned stops and door hold-out
- Three-way adjustable door hinge

Extension: **8080:** 3/4 extension slide with self-close 35mm hinge
8081: 3/4 extension slide without hinge and base
8082: 3/4 extension slide with attached hinge base

Mounting: Side

Action: Ball-bearing movement

Load Rating: 30 lb. class

Maximum Dimensions: Vertical doors: 42" high x 24" wide
Horizontal pivot doors: 24" high x 48" wide

Clearance:

Maximum Slide Width Including Hinges		
Type	**Standard**	**KV**
Self-close hinge	1-23/32"	1-21/32"
Free-swing hinge	1-23/32"	1-21/32"
Overlay hinge	1-23/32"	1-7/8"
Thick door hinge	2-3/32"	–
Extra-thick door hinge	2-13/32"	2-5/16"

Finish: Anochrome (ANO) Ebony Black (EB)

Profile:

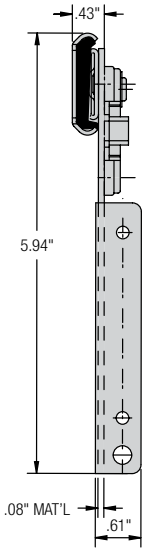

8090P CR Raised Panel Cassette Roller

Additional protection for raised panel doors

Product	Pack
8090P CR	1 per poly pack with screws; 20 per carton

Configurations

Poly (P)	1 pair per bag with screws; 10 pairs per carton				
8080EZ Anochrome (ANO)		**8081EZ Anochrome (ANO)**		**8082EZ Anochrome (ANO)**	
Includes hinges and bases		No hinges or bases		Hinge base only	
Size	**Poly (P)**	**Size**	**Poly (P)**	**Size**	**Poly (P)**
12"	8080PEZ 12	12"	8081PEZ 12	12"	8082PEZ 12
14"	8080PEZ 14	14"	8081PEZ 14	14"	8082PEZ 14
16"	8080PEZ 16	16"	8081PEZ 16	16"	8082PEZ 16
18"	8080PEZ 18	18"	8081PEZ 18	18"	8082PEZ 18
20"	8080PEZ 20	20"	8081PEZ 20	20"	8082PEZ 20
22"	8080PEZ 22	22"	8081PEZ 22	22"	8082PEZ 22
24"	8080PEZ 24	24"	8081PEZ 24	24"	8082PEZ 24
8080EZ Ebony Black (EB)				**8082EZ Ebony Black (EB)**	
12"	8080PEZ EB 12	–	–	12"	8082PEZ EB 12
14"	8080PEZ EB 14	–	–	14"	8082PEZ EB 14
16"	8080PEZ EB 16	–	–	16"	8082PEZ EB 16
18"	8080PEZ EB 18	–	–	18"	8082PEZ EB 18
20"	8080PEZ EB 20	–	–	20"	8082PEZ EB 20
22"	8080PEZ EB 22	–	–	22"	8082PEZ EB 22
24"	8080PEZ EB 24	–	–	24"	8082PEZ EB 24

Recommended Fasteners	KV Part	Finish	Qty
#6 x 13/32" Phillips Pan Head Screws	1300-83	Zinc (ZC)	1000

Hinge Kit Options

Hinge Kit (K)	2 hinges per kit; 10 kits per carton		
Mepla Nickel Hinges (For Use with 8082P and 8082Q)			
Kit (K)	**Hinge Cup Size**	**Door Thickness**	**Application**
8080 HKEZS	35 mm	3/4"	Inset
8080 HKEZL	40 mm	3/4"	Partial Overlay
8080 HKEZF	35 mm	3/4"	Inset - Free Swing
8085 HKEZT	40 mm	1"	Inset - Thick Door
8086 HKEZX	40 mm	1-1/4"	Inset - Extra Thick Door
Mepla Ebony Black (EB) Hinges (For Use with 8082P and 8082Q)			
Kit (K)	**Hinge Cup Size**	**Door Thickness**	**Application**
8080 HKEZSEB	35 mm	3/4"	Inset
8080 HKEZLEB	40 mm	3/4"	Partial Overlay
8085 HKEZTEB	40 mm	1"	Inset - Thick Door
8086 HKEZXEB	40 mm	1-1/4"	Inset - Extra Thick Door

KV Hinges (For Use with 8081P) Nickel Finish (hinge base included)			
Kit (K)	**Hinge Cup Size**	**Door Thickness**	**Application**
8080 HKS SAL	35 mm	3/4"	Inset
8080 HKF SAL	35 mm	3/4"	Inset - Free Swing
8080 HKL SAL	40 mm	3/4"	Partial Overlay
8086 HKX SAL	40 mm	1-1/4"	Inset - Thick Door
KV Hinges (For Use with 8081P) Ebony Black (EB) Finish (hinge base included)			
Kit (K)	**Hinge Cup Size**	**Door Thickness**	**Application**
8080 HKS SAL EB	35 mm	3/4"	Inset
8080 HKL SAL EB	40 mm	3/4"	Partial Overlay
8086 HKX SAL EB	40 mm	1-1/4"	Inset - Thick Door

For additional information on our KV hinge offerings please see page 59.

8091, 8092 Pivot Door Slides

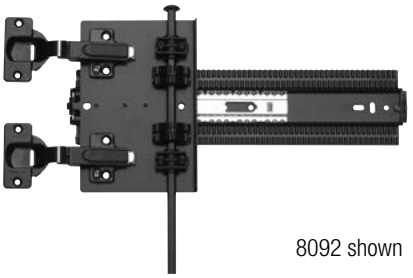

8092 shown

Features

- Rack and pinion design
- Multiple hinge options
- Greatly reduces door sag

NOTE: 3/4 Full Overlay applications require 8091 slides.
Full Overlay Kit and 8091 slides must be attached to a partition wall.

8091: Hinge and baseplate not included
8092: Baseplate attached; hinge must be ordered separately
Mounting: Side
Action: Ball-bearing movement
Load Rating: 75 lb. class
Maximum Dimensions: Vertical doors: 72" high x 26" wide
Clearance:

Maximum Slide Width Including Hinges		
Type	**Standard**	**KV**
Self-close hinge	1-23/32"	1-21/32"
Free-swing hinge	1-23/32"	1-21/32"
Overlay hinge	1-23/32"	1-7/8"
Thick door hinge	2-3/32"	–
Extra-thick door hinge	2-13/32"	2-5/16"

Finish: Ebony Black (EB)
Profile:

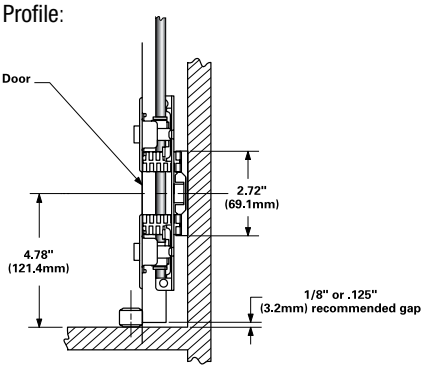

8090P CR Raised Panel Cassette Roller

Additional protection for raised panel doors

Product	Pack
8090P CR	1 per poly pack with screws; 20 per carton

Configurations

Poly (P)	1 pair per bag with screws; 1 pair per carton		
8091 Ebony Black (EB)		**8092 Ebony Black (EB)**	
Size	**Poly (P)**	**Size**	**Poly (P)**
12"	8091SP EB 12	12"	8092SP EB 12
13"	8091SP EB 13	13"	8092SP EB 13
14"	8091SP EB 14	14"	8092SP EB 14
15"	8091SP EB 15	15"	8092SP EB 15
16"	8091SP EB 16	16"	8092SP EB 16
18"	8091SP EB 18	18"	8092SP EB 18
20"	8091SP EB 20	20"	8092SP EB 20
22"	8091SP EB 22	22"	8092SP EB 22
24"	8091SP EB 24	24"	8092SP EB 24
26"	8091SP EB 26	26"	8092SP EB 26
28"	8091SP EB 28	28"	8092SP EB 28
30"	8091SP EB 30	30"	8092SP EB 30

Recommended Fasteners	KV Part	Finish	Qty
#6 x 13/32" Phillips Pan Head Screws	1300-83	Zinc (ZC)	1000

Hinge Kit Options

Hinge Kit (K)	2 hinges per kit; 10 kits per carton		
Mepla Nickel Hinges (For Use with 8092)			
Kit (K)	**Hinge Cup Size**	**Door Thickness**	**Application**
8080 HKEZS	35 mm	3/4"	Inset
8080 HKEZL	40 mm	3/4"	Partial Overlay
8080 HKEZF	35 mm	3/4"	Inset - Free Swing
8085 HKEZT	40 mm	1"	Inset - Thick Door
8086 HKEZX	40 mm	1-1/4"	Inset - Extra Thick Door
Mepla Ebony Black (EB) Hinges (For Use with 8092)			
Kit (K)	**Hinge Cup Size**	**Door Thickness**	**Application**
8080 HKEZSEB	35 mm	3/4"	Inset
8080 HKEZLEB	40 mm	3/4"	Partial Overlay
8085 HKEZTEB	40 mm	1"	Inset - Thick Door
8086 HKEZXEB	40 mm	1-1/4"	Inset - Extra Thick Door

KV Hinges (For Use with 8091) Nickel Finish (hinge base included)			
Kit (K)	**Hinge Cup Size**	**Door Thickness**	**Application**
8080 HKS SAL	35 mm	3/4"	Inset
8080 HKF SAL	35 mm	3/4"	Inset - Free Swing
8080 HKL SAL	40 mm	3/4"	Partial Overlay
8086 HKX SAL	40 mm	1-1/4"	Inset - Thick Door
KV Hinges (For Use with 8091) Ebony Black (EB) Finish (hinge base included)			
Kit (K)	**Hinge Cup Size**	**Door Thickness**	**Application**
8080 HKS SAL EB	35 mm	3/4"	Inset
8080 HKL SAL EB	40 mm	3/4"	Partial Overlay
8086 HKX SAL EB	40 mm	1-1/4"	Inset - Thick Door

For additional information on our KV hinge offerings please see page 59.

8090B Pinion Shafts for 4x4 Pocket Door Slides

SB Pack (SB) - 1 pair of shafts		Bulk Pack (B) - 10 each
8090B Pinion Shaft Ebony Black (EB) Finish		
Size	**Bulk (B)**	**Quantity**
36"	8090B EB 36	10
48"	8090B EB 48	10
72"	8090B EB 72	10
8092SB Pinion Shaft Ebony Black (EB) Finish		
36"	8092SB EB 36	1
48"	8092SB EB 48	1
72"	8092SB EB 72	1

4x4 Pocket Door Full Overlay Kit

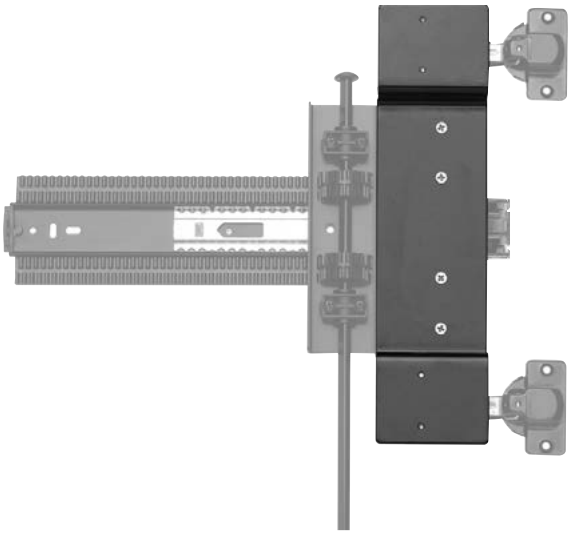

Features

- Provides a full door overlay on doors up to .75" thick
- Does not compromise key performance features of 4x4 pocket door system
- Systems for both Mepla and KV hinges
- Requires 8091 slide
- Must attach to a partition wall

Mounting: Mounts directly to KV 8091 Series slide
Load Rating: 75 lb. class
Finish: Black

Configurations

MADE IN USA

	Brackets	Overlay Hinges	Hinge Bases	Hinge Cover Base	Protective Felt Pads	Packed
Poly (P)	Qty: 2	Qty: 4	Qty: 4	Qty: 4	Qty: 4	1 kit/ carton

8091 Full Overlay Pocket Door Kit Black (BLK) Finish	
Poly (P)	**Hinge**
8091SFULL34M	Mepla
8091SFULL34S	KV

8091 Full Overlay Pocket Door Kit Black (BLK) Finish		
Door Thickness	**Amount of Overlay**	**Pocket Width**
3/4"	3/4"	1-3/4"
13/16"	11/16"	1-13/16"
7/8"	5/8"	1-7/8"
15/16"	9/16"	1-15/16"
1"	1/2"	2"
1-1/16"	7/16"	2-1/16"
1-1/8"	3/8"	2-1/8"
1-3/16"	5/16"	2-3/16"
1-1/4"	1/4"	2-1/4"

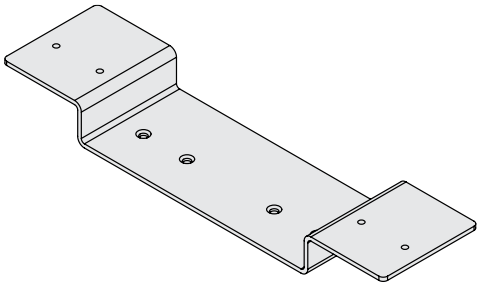

Bracket diagram for Mepla hinge

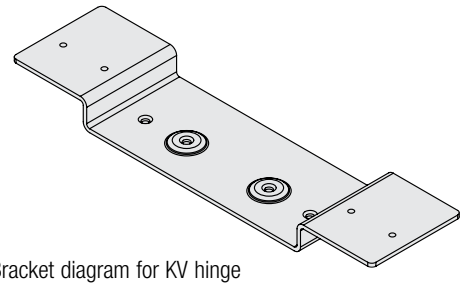

Bracket diagram for KV hinge

Full Overlay Kit Installation Requirements

- Overlay kits require the use of a KV 8091 series slide
- Overlay kits require the use of a pinion shaft
- Overlay kits require the use of a partition wall within the cabinet
- 40mm hinge bore is required

NOTE: 3/4 Full Overlay applications require 8091 slides. Full Overlay Kit and 8091 slides much be attached to a partition wall.

KV Pocket Door Hinge Kits

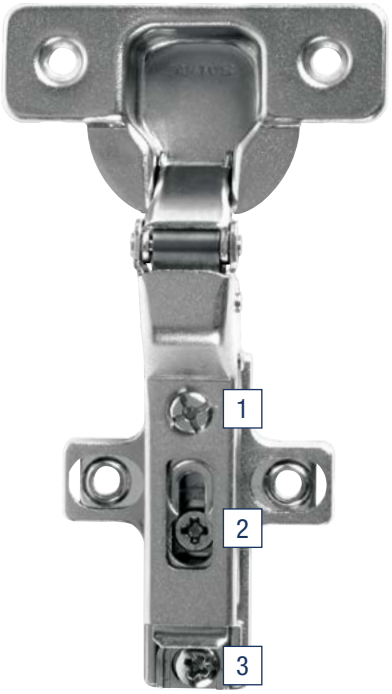

1. Depth Adjustment Cam
   The horizontal (lateral) adjustment range is 6mm.
   The depth adjustment range is 3.1mm (-0.5mm to +2.8mm) for all hinge bases.

2. Horizontal (Lateral) Adjustment Cam
   The horizontal (lateral) adjustment range is 6mm (-1.5mm to +4.5mm for 35mm cup hinges; -0.5mm to +5.5mm for 40mm cup hinges), while maintaining a constant gap behind the door.

3. Vertical (Height) Adjustment Cam
   The vertical (height) adjustment range is 4mm (-2mm to +2mm).

Features

- Three-way cam hinges for easy adjustment
- Horizontal, vertical and depth changes can be made without loosening any screws
- Four types of hinges for a variety of application

Clearance: 8080 HKS standard hinge: 1-21/32"
8080 HKF free swing hinge: 1-21/32"
8080 HKL partial overlay hinge: 1-37/64"
8080 HKX extra thick door hinge: 1-37/64"

Finish: Black (BLK), Nickel (NP)

Configurations

Pack Configurations		Hinge Base	Hinges	Screws	Cover Caps
Kit (K)	2 per bag; 10 bags per carton	Yes	Yes	Yes	Yes

Nickel (NP) Finish KV Hinges for Use with 8071, 8081, 8091 Pocket Door Slides			
Kit (K)	**Hinge Cup Size**	**Door Thickness**	**Application**
8080 HKS SAL	35 mm	3/4"	Inset
8080 HKF SAL	35 mm	3/4"	Inset - Free Swing
8080 HKL SAL	40 mm	3/4"	Partial Overlay
8086 HKX SAL	40 mm	1-1/4"	Inset - Thick Door

Black (EB) Finish KV Hinges for Use with 8071, 8081, 8091 Pocket Door Slides			
Kit (K)	**Hinge Cup Size**	**Door Thickness**	**Application**
8080 HKS SAL EB	35 mm	3/4"	Inset
8080 HKL SAL EB	40 mm	3/4"	Partial Overlay
8086 HKX SAL EB	40 mm	1-1/4"	Inset - Thick Door

Hinge Systems

How to Choose a Hinge System 61
Required Hinge Quantity for Wood Doors. 62
Supreme Hinge 63
Master Hinge. 64
Star Hinge. 66
Star Track Hinge 68
Mini Star Hinge 70
KV 90°/45° Hinge 72
Mounting Plates. 74

KNAPE&VOGT®
POWERED BY samet™

Download at www.kv.com > Resource Library

How to Choose a Hinge System

First, to define a Euro-style hinge system is to understand the parts. They are: 1) hinge cup, 2) hinge body and 3) mounting plate. Manufacturers will combine the hinge cup with the body with options for the mounting plate. KV hinge mounting plate heights are 5mm, 7mm and 9mm.

What drives the hinge "system" choice is related to the overlay of the door on the cabinet. Common overlays are full, half and inset. A full overlay is where the door covers nearly all the cabinet frame. Half overlay covers half the cabinet frame and inset is where the door sits inside the cabinet frame.

For manufacturing efficiency, cabinet makers will determine specifications for overlay and drill patterns for the hinge systems. One key drill pattern is the "fixed distance" or "hinge constant" - the distance the hinge cup overlays the cabinet side panel without a mounting plate attached. For KV hinges, the fixed Distance/hinge constants are:

Full Overlay	18mm
Half Overlay	09mm
Inset	0mm

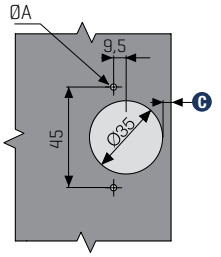

The second key drill pattern is the "hinge cup drilling distance". It is denoted in assembly drawings as the distance of the outside edge of the hinge cup hole to the edge of the cabinet door (see "C" in the illustration).

This distance is commonly measured in millimeters and ranges from 3mm to 7mm. The hinge cup distance will depend on the cabinetmaker's design and materials for the cabinet door.

A larger hinge cup drilling distance will increase the overlay on the hinged side of the cabinet side panel. Smaller hinge cup drilling distances will decrease the overlay on the hinged side of the cabinet side panel.

How to Calculate Overlays (which Hinge and Mounting Plate combinations)

1. What is the target overlay?
2. Take the fixed distance/hinge constant
3. Subtract the mounting plate height
4. Add the hinge cup drilling distance

TARGET OVERLAY = FIXED DISTANCE – MP HEIGHT + CUP DISTANCE

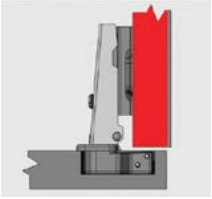

Overlay: The distance that the door covers the side wall of the cabin when the door is closed. Side wall thickness is not important for Overlay calculation

Cup Distance: The distance from the edge of the bowl hole to the edge of the lid. it is one of the variables used to provide the desired cover overlay value. The maximum value depends on the hinge type. (3mm – 7mm)

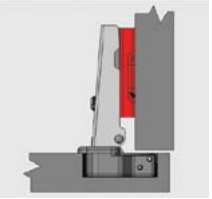

Mounting Plate Thickness: The part used with the hinge to mount the door to the cabinet is called a mounting plate.

The mounting plate used for each hinge is specific to that hinge. 5-7-9 mm

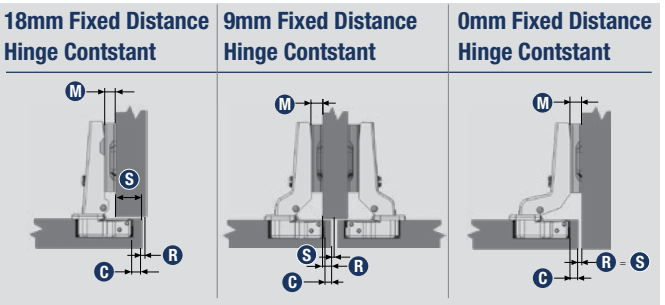

Target Overlay/ Applications	Hinge Opening Angle	Hinge Type	Hinge Arm Crank	Fixed distance/ Hinge Constant	Mounting Plate Height	Hinge Cup Drilling Distance
Inset -2mm (-3/32")	100° & 165°	Inset	18mm	0mm	5mm	3mm
Inset -3mm (-1/8")	100° & 165°	Inset	18mm	0mm	7mm	4mm
Inset -2mm (-3/32")*	100°	Half Overlay	9mm	9mm	14mm	3mm
1/8" (3mm)	100° & 165°	Half Overlay	9mm	9mm	9mm	3mm
1/4" (6mm)	100° & 165°	Half Overlay	9mm	9mm	9mm	6mm
3/8" (9mm)	100° & 165°	Half Overlay	9mm	9mm	5mm	5mm
1/2" (13mm)	100° & 165°	Full Overlay	0mm	18mm	9mm	4mm
9/16" (14.5mm)	100° & 165°	Full Overlay	0mm	18mm	7mm	3.5mm
5/8" (16mm)	100° & 165°	Full Overlay	0mm	18mm	5mm	3mm
5/8" (16mm)	100° & 165°	Full Overlay	0mm	18mm	7mm	5mm
11/16" (17.5mm)	100° & 165°	Full Overlay	0mm	18mm	5mm	4.5mm
23/32" (18mm)	100° & 165°	Full Overlay	0mm	18mm	5mm	5mm
3/4" (19mm)	100° & 165°	Full Overlay	0mm	18mm	5mm	6mm
25/32" (20mm)	100° & 165°	Full Overlay	0mm	18mm	5mm	7mm

*Face-Frame Flush Inset Plate

Required Hinge Quantity for Wood Doors

Applies to Master Hinge System.

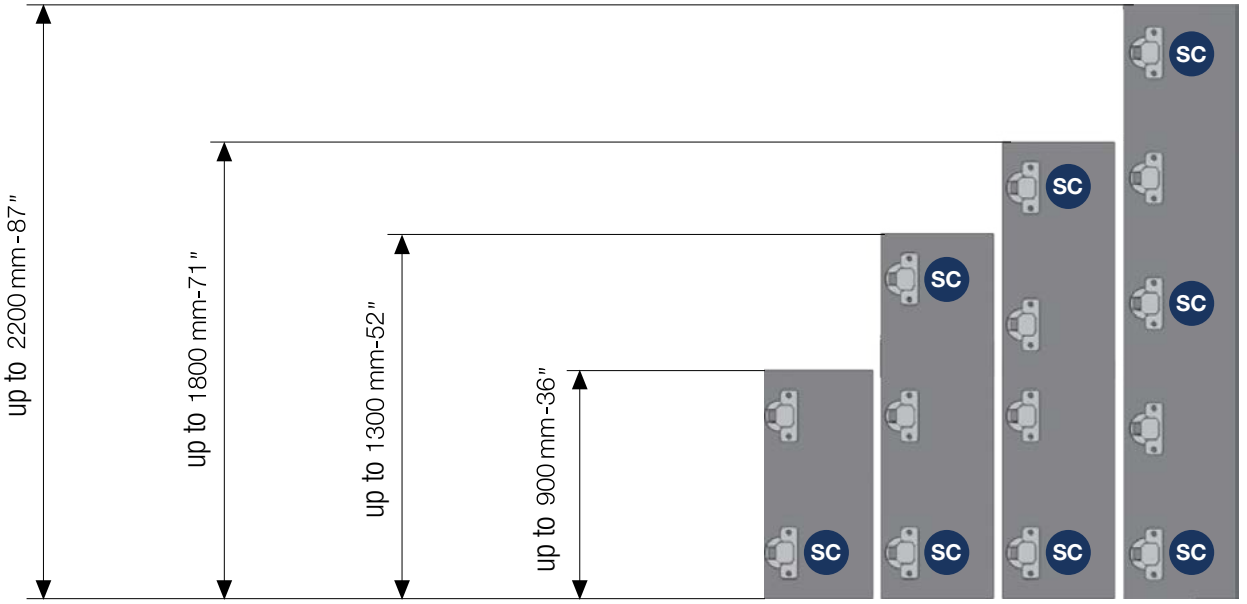

- Door width is taken as up to 600 mm.
- Number of soft close hinges can change according to the weight of the door. The number of hinges should be decided with trial installation for uncertain situation.

SC Denotes Soft-close Hinge required for Soft-Close application.

Applies to Supreme, Star, Star Track, KV 90°/45° Hinge.

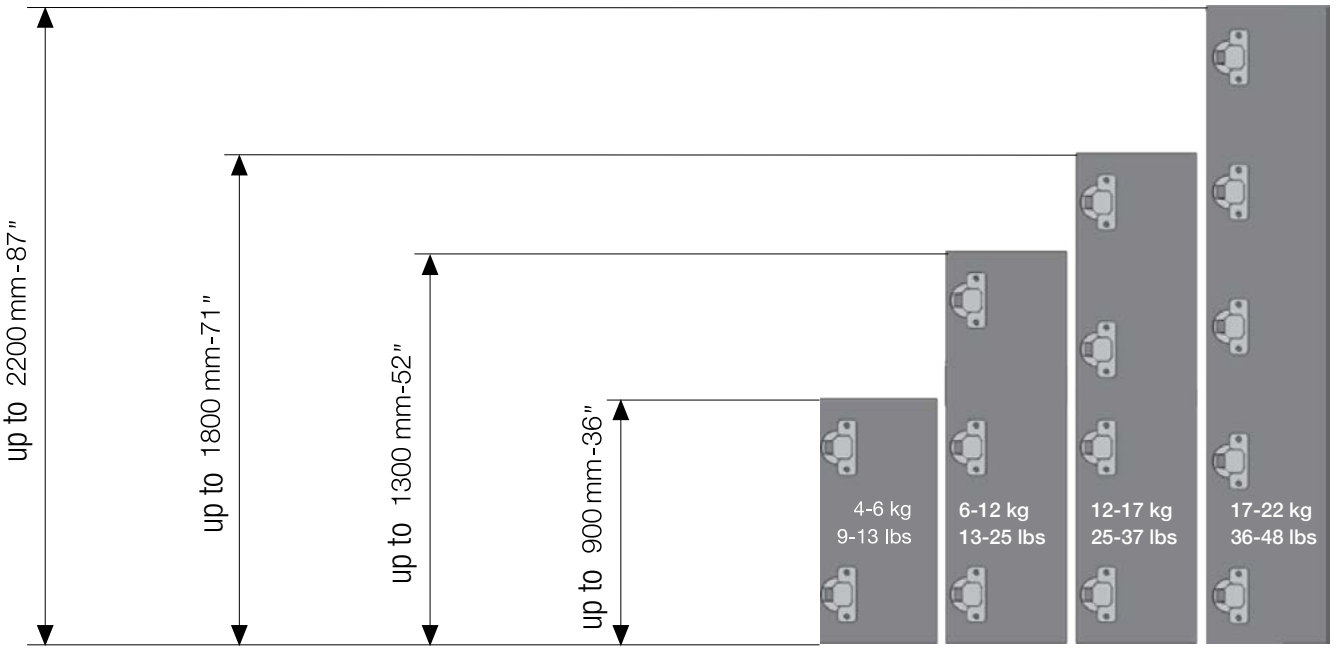

- Quantity of hinges can be calculated according to door dimensions and weight of the door by referring the diagram.
- The number of hinges showed in table should be considered as guide. The number of hinges should be decided with trial installation for uncertain situation.
- Door width is taken as up to 600 mm.

Supreme Hinge

Features Track-Lock–a release lever that separates the hinge cup (on door) and mounting plate (on cabinet) to save time during your upper cabinet installation process.

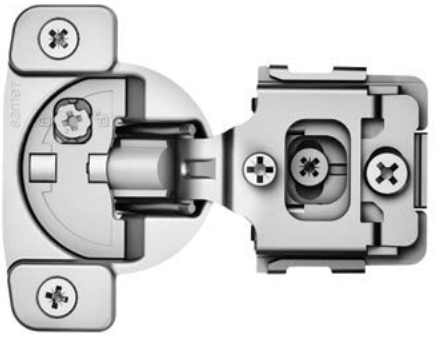

1/2" Overlay

1-1/4" Overlay

Features

Application: Face Frame
Hinge Mount Type: 1/2" Overlay / 1-1/4" Overlay
Degree of Opening: 105°
Cup Diameter: 35mm
Cup Depth: 11mm
Mounting Type: Wood screw / 8mm Dowel
Diameter of Mounting Hole: 2,5mm (wood screw) and 8mm (dowel)
Closing: Soft-Close Mechanism with On-Off Feature
Adjustments: 6-way height, side and depth adjustment
Depth Adjustment: 1/2" Overlay - +2,5/-0mm **1-1/4" Overlay -** +3,0/-0mm
Min. Door Thickness: 16mm
Max. Door Thickness: 19mm
Door Material: Wood
Drilling Pattern: 45mm

Configurations

Standard		200 eaches per carton	
1/2" Overlay Supreme			
Mounting Type	**Closing**	**Overlay**	**Part**
8mm Dowel	Soft-Close	1/2"	KVSHB SOFT 400
Woodscrew	Soft-Close	1/2"	KVSHB SOFT 402
1-1/4" Supreme			
Mounting Type	**Closing**	**Overlay**	**Part**
8mm Dowel	Soft-Close	1-1/4"	KVSHB SOFT 401
Woodscrew	Soft-Close	1-1/4"	KVSHB SOFT 403
Restriction Clip			
Type		**Pack**	**Part**
85° Restriction Clip		5,000 eaches	KVSHB RC 410

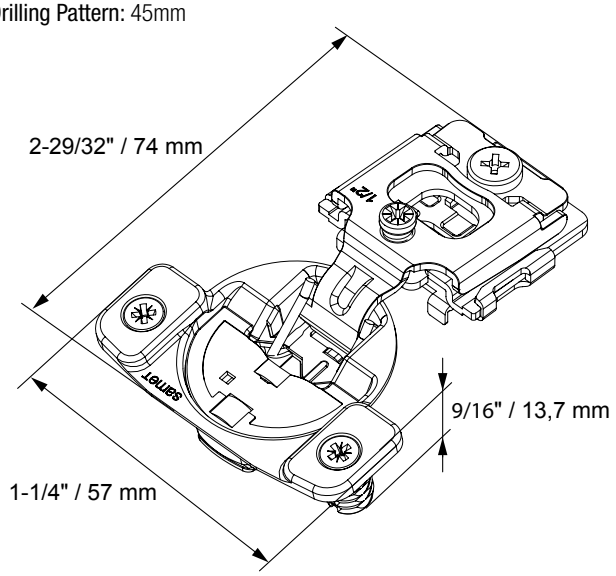

1/2" Overlay with Dowel

Features: KVSHB SOFT 400

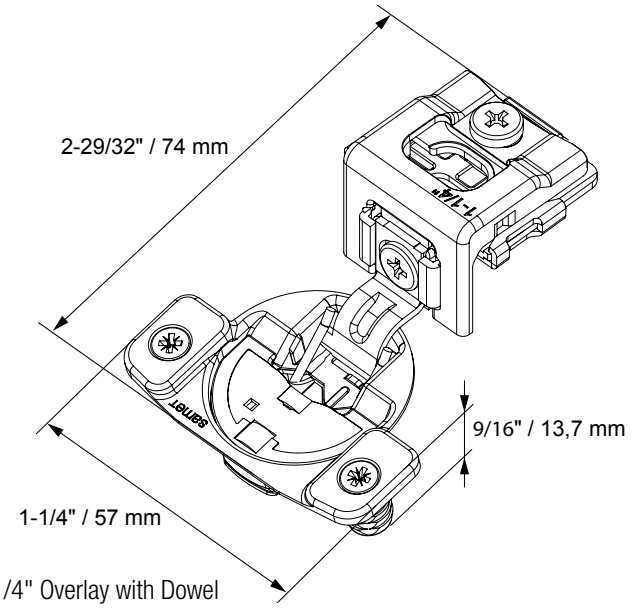

1-1/4" Overlay with Dowel

Features: KVSHB SOFT 401

KNAPE&VOGT®
POWERED BY samet™

Master Hinge

Mounting plate featured for frameless application

Features

Application: Face Frame and Frameless (use with a mounting plate)
Hinge Mount Type: Full Overlay, Half Overlay and Inset
Degree of Opening: 110°
Cup Diameter: 35mm
Cup Depth: 12,5mm
Mounting Type: Wood screw / 8mm Dowel / Euro screw / Tool-less
Diameter of Mounting Hole: 2,5mm (wood screw) and 8mm (dowel)
Closing: Soft-Close / Self-Close / Free Swing
Adjustments: 6-way height, side and depth adjustment
Depth Adjustment: +3,0/-2mm
Side Adjustment: +6,0/-1mm
Min. Door Thickness: 16mm
Max. Door Thickness: 26mm
Door Material: Wood / Aluminium
Drilling Pattern: 45mm

For both frameless and face frame applications, see Mounting Plate options

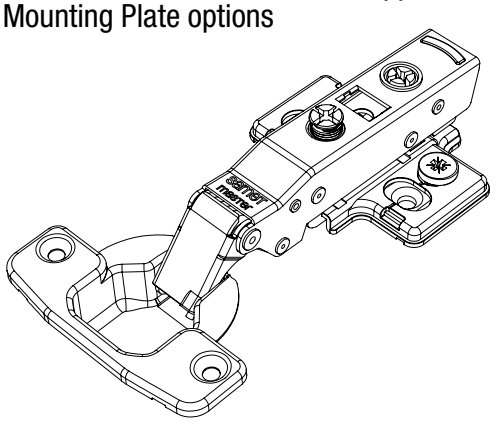

Features: KVSHB SOFT 801

Configurations

Standard		125 eaches per carton	
Full Overlay Master Hinge			
Mounting Type	**Closing**	**Overlay**	**Part**
Woodscrew	Soft-Close	Full	KVSHB SOFT 800
8mm Dowel	Soft-Close	Full	KVSHB SOFT 808
Tool-less	Soft-Close	Full	KVSHB SOFT 809
Woodscrew	Self-Close	Full	KVSHB SELF 803
8mm Dowel	Self-Close	Full	KVSHB SELF 814
Tool-less	Self-Close	Full	KVSHB SELF 815
Woodscrew	Free Swing	Full	KVSHB FW 806
8mm Dowel	Free Swing	Full	KVSHB FW 820
Half Overlay Master Hinge			
Mounting Type	**Closing**	**Overlay**	**Part**
Woodscrew	Soft-Close	Half	KVSHB SOFT 801
8mm Dowel	Soft-Close	Half	KVSHB SOFT 810
Tool-less	Soft-Close	Half	KVSHB SOFT 811
Woodscrew	Self-Close	Half	KVSHB SELF 804
8mm Dowel	Self-Close	Half	KVSHB SELF 816
Tool-less	Self-Close	Half	KVSHB SELF 817
Inset Master Hinge			
Mounting Type	**Closing**	**Overlay**	**Part**
Woodscrew	Soft-Close	Inset	KVSHB SOFT 802
8mm Dowel	Soft-Close	Inset	KVSHB SOFT 812
Tool-less	Soft-Close	Inset	KVSHB SOFT 813
Woodscrew	Self-Close	Inset	KVSHB SELF 805
8mm Dowel	Self-Close	Inset	KVSHB SELF 818
Tool-less	Self-Close	Inset	KVSHB SELF 819

Add-On Mechanism		
Type	**Pack**	**Part**
Push-Open Adjustable Long Latch Bracket	250 eaches	KVSHB LB GR
Push-Open Long Latch Mechanism Strike Plate	250 eaches	KVSHB LMP NK
Push-Open Long Latch Mechanism	250 eaches	KVSHB LM GR
Decorative Cover		
Type	**Pack**	**Part**
Hinge Arm Decorative Cover	250 eaches	KVSHB DC 807
Hinge Cup Decorative Cover	250 eaches	KVSHB DC 310
85° Restriction Clip	5,000 eaches	KVSHB RC 410
Lever Restriction Clip	5,000 eaches	KVSHB LRC 822

KNAPE&VOGT
POWERED BY samet

Master Hinge

Full Overlay — Crank 0

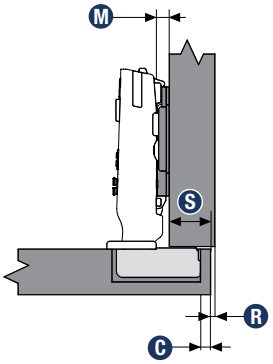

Ⓢ Cabinet Sidewall Coverage	Ⓜ Mounting Plate 5mm	7mm	9mm
12mm			3mm
13mm			4mm
14mm		3mm	5mm
15mm		4mm	6mm
16mm	3mm	5mm	7mm
17mm	4mm	6mm	
18mm	5mm	7mm	
19mm	6mm		
20mm	7mm		
	Ⓒ Cup Distance		

Half Overlay — Crank 9

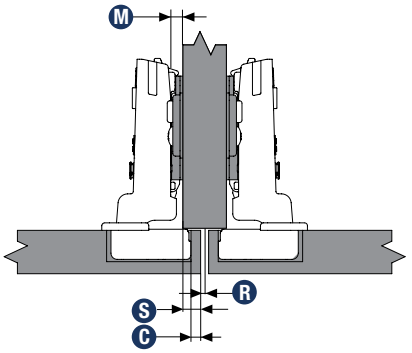

Ⓢ Cabinet Sidewall Coverage	Ⓜ Mounting Plate 5mm	7mm	9mm
3mm			3mm
4mm			4mm
5mm		3mm	5mm
6mm		4mm	6mm
7mm	3mm	5mm	7mm
8mm	4mm	6mm	
9mm	5mm	7mm	
10mm	6mm		
11mm	7mm		
	Ⓒ Cup Distance		

Inset — Crank 18

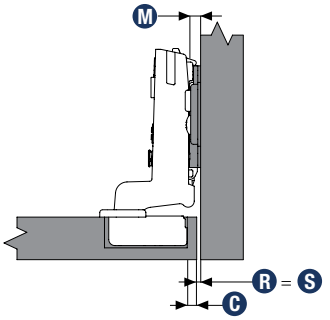

Ⓢ Cabinet Sidewall Coverage	Ⓜ Mounting Plate 5mm	7mm	9mm
6mm			3mm
5mm			4mm
4mm		3mm	5mm
3mm		4mm	6mm
2mm	3mm	5mm	7mm
1mm	4mm	6mm	
0mm	5mm	7mm	
	Ⓒ Cup Distance		

Based on cabinet sidewall thickness of aproximately 3/4" [19mm].

	Ⓡ Minimum Reveal for Doors										
Ⓓ Door Thickness	16mm	17mm	18mm	19mm	20mm	21mm	22mm	23mm	24mm	25mm	26mm
Ⓒ = 3mm	.72mm	.98mm	1.29mm	1.65mm	2.08mm	2.59mm	3.21mm	3.93mm	4.72mm	5.54mm	6.39mm
Ⓒ = 4mm	.69mm	.94mm	1.23mm	1.57mm	1.97mm	2.44mm	2.98mm	3.62mm	4.34mm	5.12mm	5.93mm
Ⓒ = 5mm	.67mm	.91mm	1.18mm	1.51mm	1.88mm	2.31mm	2.81mm	3.39mm	4.04mm	4.76mm	5.52mm
Ⓒ = 6mm	.65mm	.87mm	1.14mm	1.45mm	1.80mm	2.21mm	2.67mm	3.19mm	3.79mm	4.45mm	5.17mm
Ⓒ = 7mm	.62mm	.84mm	1.10mm	1.40mm	1.73mm	2.11mm	2.55mm	3.04mm	3.59mm	4.20mm	4.87mm

Hinge Cup

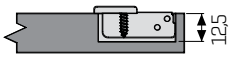

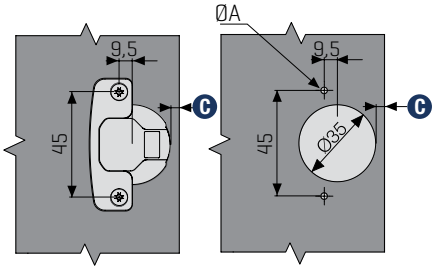

Drill Hole Dimensions	
Cup Dimension	35mm
Axis Dimension	45mm

Star Hinge

Mounting plate featured for frameless application

Features

Application: Face Frame and Frameless (use with a mounting plate)
Hinge Mount Type: Full
Degree of Opening: 110°
Cup Diameter: 35mm
Cup Depth: 11,3mm
Mounting Type: Wood screw / 8mm Dowel
Diameter of Mounting Hole: 2,5mm (wood screw) and 8mm (dowel)
Closing: Self-Close
Adjustments: 6-way height, side and depth adjustment
Depth Adjustment: +2,5/-2mm
Min. Door Thickness: 14mm
Max. Door Thickness: 22mm
Door Material: Wood
Drilling Pattern: 45mm

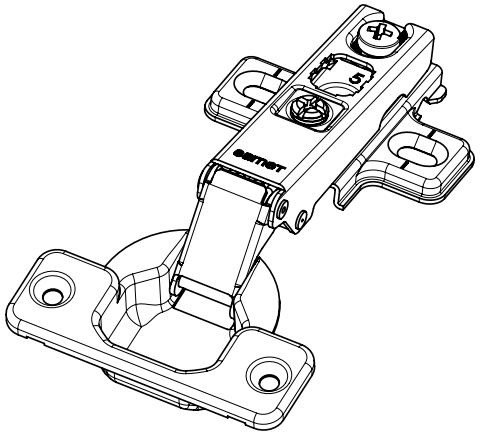

Features: KVSHB SELF 600

Configurations

Standard		250 eaches per carton	
Full Overlay Star			
Mounting Type	**Closing**	**Overlay**	**Part**
8mm Dowel	Self-Close	Full	KVSHB SOFT 400
Woodscrew	Self-Close	Full	KVSHB SELF 600
Add-On Mechanism			
Type		**Pack**	**Part**
Cabinet Plus Soft Closing Mechanism		250 eaches	KVSHB SOFTM GR
Cabinet Plus Mounting Bracket		250 eaches	KVSHB MB GR
Decorative Cover			
Type		**Pack**	**Part**
Hinge Arm Decorative Cover		250 eaches	KVSHB DC 516
Hinge Cup Decorative Cover		250 eaches	KVSHB DC 517

KNAPE&VOGT
POWERED BY samet

Star Hinge

Full Overlay — Crank 0

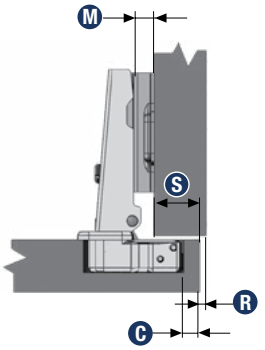

Cabinet Sidewall Coverage (S)	Mounting Plate (M) 5mm	7mm	9mm
12mm			3mm
13mm			4mm
14mm		3mm	5mm
15mm		4mm	6mm
16mm	3mm	5mm	7mm
17mm	4mm	6mm	
18mm	5mm	7mm	
19mm	6mm		
20mm	7mm		
	Cup Distance (C)		

Half Overlay — Crank 9

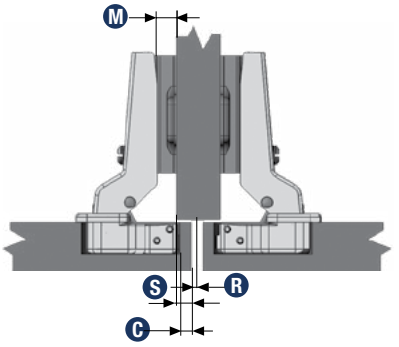

Cabinet Sidewall Coverage (S)	Mounting Plate (M) 5mm	7mm	9mm
3mm			3mm
4mm			4mm
5mm		3mm	5mm
6mm		4mm	6mm
7mm	3mm	5mm	7mm
8mm	4mm	6mm	
9mm	5mm	7mm	
10mm	6mm		
11mm	7mm		
	Cup Distance (C)		

Inset — Crank 18

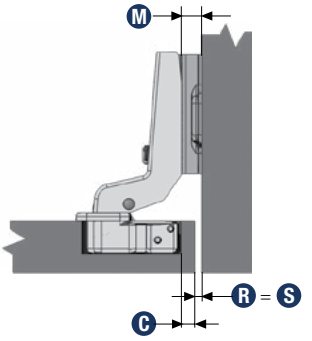

Cabinet Sidewall Coverage (S)	Mounting Plate (M) 5mm	7mm	9mm
6mm			3mm
5mm			4mm
4mm		3mm	5mm
3mm		4mm	6mm
2mm	3mm	5mm	7mm
1mm	4mm	6mm	
0mm	5mm	7mm	
	Cup Distance (C)		

Based on cabinet sidewall thickness of aproximately 3/4" [19mm].

Door Thickness (D)	Minimum Reveal for Doors (R) 16mm	17mm	18mm	19mm	20mm	21mm	22mm	23mm	24mm	25mm	26mm
C = 3mm	.71mm	.96mm	1.27mm	1.63mm	2.05mm	2.56mm	3.17mm	3.89mm	4.67mm	5.49mm	6.34mm
C = 4mm	.68mm	.92mm	1.21mm	1.55mm	1.95mm	2.41mm	2.95mm	3.59mm	4.30mm	5.07mm	5.88mm
C = 5mm	.65mm	.89mm	1.17mm	1.49mm	1.86mm	2.29mm	2.78mm	3.35mm	4.00mm	4.71mm	5.47mm
C = 6mm	.63mm	.86mm	1.12mm	1.43mm	1.78mm	2.18mm	2.64mm	3.16mm	3.76mm	4.41mm	5.13mm
C = 7mm	.61mm	.83mm	1.08mm	1.38mm	1.71mm	2.09mm	2.52mm	3.01mm	3.56mm	4.16mm	4.83mm

Hinge Cup

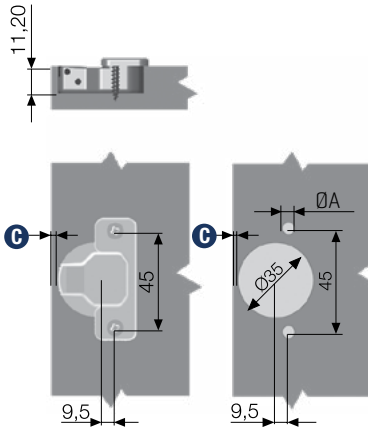

Drill Hole Dimensions	
Cup Dimension	35mm
Axis Dimension	45mm

Fastener Options

0A (mm) = Chipboard Screw
02,5x5 / Euro Screw
05x12 / (08-10) Dowel
(08-10)x12 , Easy Fit; 10x12

Star Track Hinge

Mounting plate featured for face frame application

Features

Application: Face Frame and Frameless (use with a mounting plate)
Hinge Mount Type: Full
Degree of Opening: 110˚,165˚ and Folding Door Options
Special Applications: 45°, 90° degree and 165° opening hinges
Cup Diameter: 35mm
Cup Depth: 11,3mm
Mounting Type: Wood screw / 8mm Dowel
Diameter of Mounting Hole: 2,5mm (wood screw) and 8mm (dowel)
Closing: Self-Close
Adjustments: 6-way height, side and depth adjustment
Depth Adjustment: +2/-2mm
Min. Door Thickness: 14mm
Max. Door Thickness: 22mm
Door Material: Wood
Drilling Pattern: 45mm

Configurations

Standard		125 eaches per carton	
Full Overlay Star Track			
Mounting Type	**Closing**	**Overlay**	**Part**
Woodscrew	Self-Close	Full	KVSHB SELF 503
8mm Dowel	Self-Close	Full	KVSHB SELF 505
Woodscrew	Self-Close	Full	KVSHB FD 500
8mm Dowel	Self-Close	Full	KVSHB FD 501
Woodscrew	Folding	–	KVSHB SELF 502
8mm Dowel	Folding	–	KVSHB SELF 504

Decorative Cover		
Type	**Pack**	**Part**
Hinge Arm Decorative Cover	250 eaches	KVSHB DC 516
Hinge Cup Decorative Cover	250 eaches	KVSHB DC 517

For both frameless and face frame applications, see Mounting Plate options

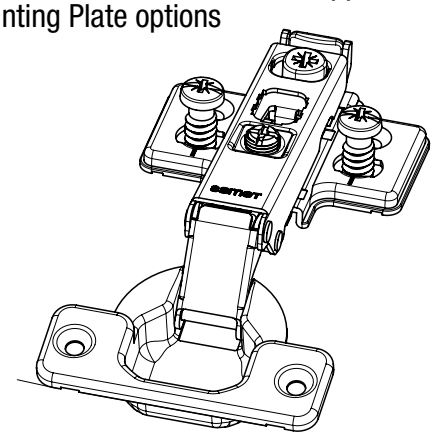

Features: KVSHB SELF 505

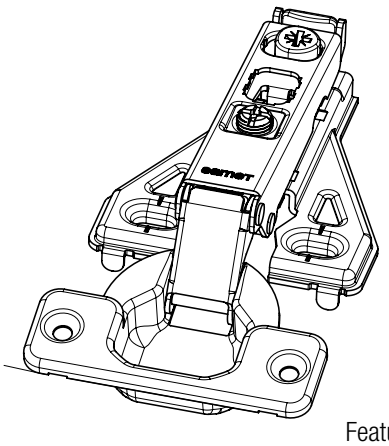

Features: KVSHB FD 501

KNAPE&VOGT
POWERED BY samet

Star Track Hinge

Full Overlay — Crank 0

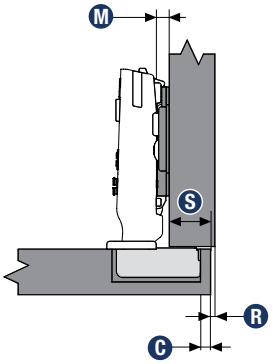

Ⓢ Cabinet Sidewall Coverage	Ⓜ Mounting Plate 5mm	7mm	9mm
12mm			3mm
13mm			4mm
14mm		3mm	5mm
15mm		4mm	6mm
16mm	3mm	5mm	7mm
17mm	4mm	6mm	
18mm	5mm	7mm	
19mm	6mm		
20mm	7mm		
	Ⓒ Cup Distance		

Half Overlay — Crank 9

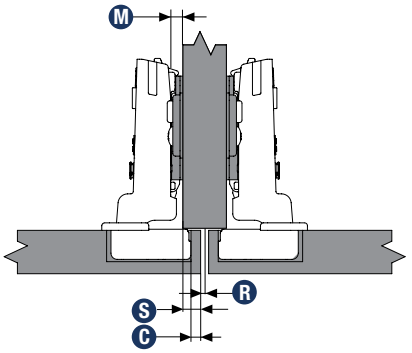

Ⓢ Cabinet Sidewall Coverage	Ⓜ Mounting Plate 5mm	7mm	9mm
3mm			3mm
4mm			4mm
5mm		3mm	5mm
6mm		4mm	6mm
7mm	3mm	5mm	7mm
8mm	4mm	6mm	
9mm	5mm	7mm	
10mm	6mm		
11mm	7mm		
	Ⓒ Cup Distance		

Inset — Crank 18

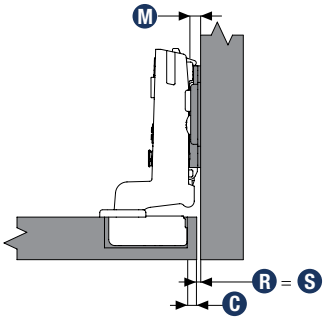

Ⓢ Cabinet Sidewall Coverage	Ⓜ Mounting Plate 5mm	7mm	9mm
6mm			3mm
5mm			4mm
4mm		3mm	5mm
3mm		4mm	6mm
2mm	3mm	5mm	7mm
1mm	4mm	6mm	
0mm	5mm	7mm	
	Ⓒ Cup Distance		

Based on cabinet sidewall thickness of aproximately 3/4" [19mm].

	Ⓡ Minimum Reveal for Doors										
Ⓓ Door Thickness	16mm	17mm	18mm	19mm	20mm	21mm	22mm	23mm	24mm	25mm	26mm
Ⓒ = 3mm	.72mm	.98mm	1.29mm	1.65mm	2.08mm	2.59mm	3.21mm	3.93mm	4.72mm	5.54mm	6.39mm
Ⓒ = 4mm	.69mm	.94mm	1.23mm	1.57mm	1.97mm	2.44mm	2.98mm	3.62mm	4.34mm	5.12mm	5.93mm
Ⓒ = 5mm	.67mm	.91mm	1.18mm	1.51mm	1.88mm	2.31mm	2.81mm	3.39mm	4.04mm	4.76mm	5.52mm
Ⓒ = 6mm	.65mm	.87mm	1.14mm	1.45mm	1.80mm	2.21mm	2.67mm	3.19mm	3.79mm	4.45mm	5.17mm
Ⓒ = 7mm	.62mm	.84mm	1.10mm	1.40mm	1.73mm	2.11mm	2.55mm	3.04mm	3.59mm	4.20mm	4.87mm

Hinge Cup

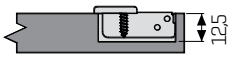

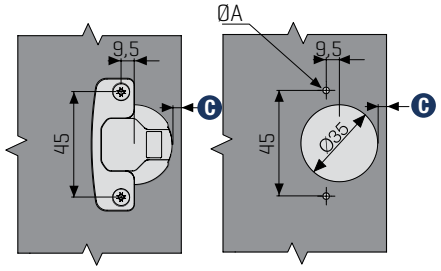

Drill Hole Dimensions	
Cup Dimension	35mm
Axis Dimension	45mm

Mini Star Hinge

Features

Application: Frameless
Hinge Mount Type: Full
Degree of Opening: 110°
Cup Diameter: 26mm
Cup Depth: 10,2mm
Mounting Type: Euroscrew
Diameter of Mounting Hole: 26mm
Closing: Self-Close
Adjustments: 6-way height, side and depth adjustment
Depth Adjustment: +/- 2mm
Min. Door Thickness: 16mm
Max. Door Thickness: 26mm
Door Material: Wood
Drilling Pattern: 38mm

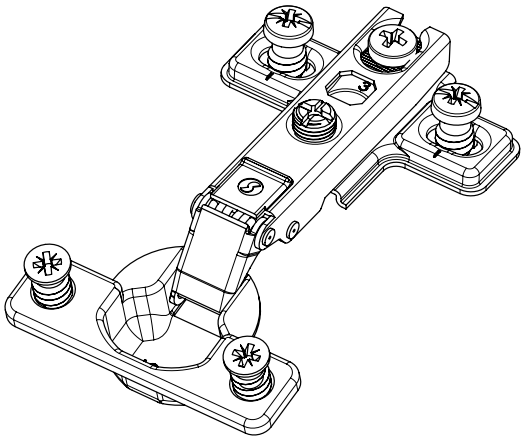

Features: KVSH MINI ST01

Configurations

Standard		500 eaches per carton	
Mini Star Hinge			
Mounting Type	**Closing**	**Overlay**	**Part**
Woodscrew	Self-Close	Full	KVSH MINI ST01
Mounting Plate			
Type		**Pack**	**Part**
Mounting Plate		500 eaches	KVSH MINI MP02

KNAPE&VOGT
POWERED BY samet

Download at www.kv.com > Resource Library

Mini Star Hinge

Full Overlay — Crank 0

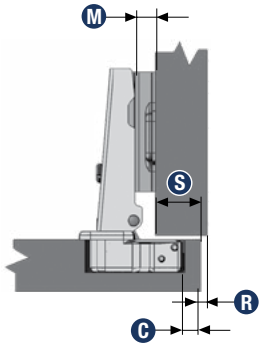

Cabinet Sidewall Coverage (S)	Mounting Plate (M) 2mm	3mm	4mm	5mm	6mm
12mm					3mm
13mm				3mm	4mm
14mm			3mm	4mm	5mm
15mm		3mm	4mm	5mm	6mm
16mm	3mm	4mm	5mm	6mm	
17mm	4mm	5mm	6mm		
18mm	5mm	6mm			
19mm	6mm				
	Cup Distance (C)				

Half Overlay — Crank 9

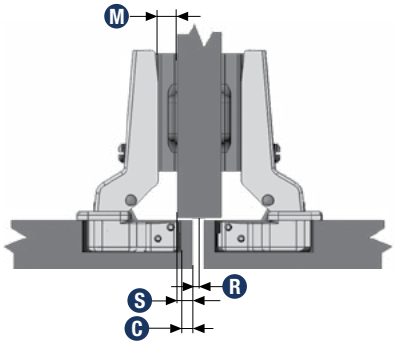

Cabinet Sidewall Coverage (S)	Mounting Plate (M) 2mm	3mm	4mm	5mm	6mm
3mm					3mm
4mm				3mm	4mm
5mm			3mm	4mm	5mm
6mm		3mm	4mm	5mm	6mm
7mm	3mm	4mm	5mm	6mm	
8mm	4mm	5mm	6mm		
9mm	5mm	6mm			
10mm	6mm				
	Cup Distance (C)				

Inset — Crank 18

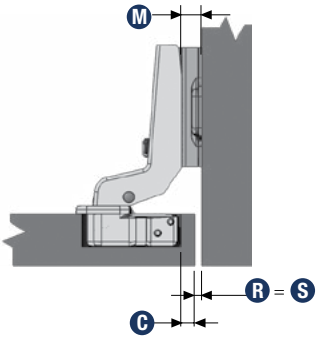

Cabinet Sidewall Coverage (S)	Mounting Plate (M) 2mm	3mm	4mm	5mm	6mm
6mm					
5mm				3mm	
4mm			3mm	4mm	
3mm		3mm	4mm	5mm	
2mm	3mm	4mm	5mm	6mm	
1mm	4mm	5mm	6mm		
0mm	5mm	6mm			
	Cup Distance (C)				

Based on cabinet sidewall thickness of aproximately 3/4" [19mm].

Door Thickness (D)	Minimum Reveal for Doors (R) 16mm	17mm	18mm	19mm	20mm	21mm	22mm	23mm	24mm	25mm	26mm
(C) = 3mm	1.76mm	2.31mm	2.99mm	3.77mm	4.59mm	5.45mm	6.33mm	7.23mm	8.14mm	9.06mm	9.99mm
(C) = 4mm	1.66mm	2.13mm	2.71mm	3.41mm	4.17mm	4.98mm	5.82mm	6.69mm	7.57mm	8.47mm	9.37mm
(C) = 5mm	1.57mm	2.00mm	2.51mm	3.12mm	3.82mm	4.23mm	5.37mm	6.20mm	7.05mm	7.92mm	8.80mm
(C) = 6mm	1.49mm	1.89mm	2.36mm	2.91mm	3.54mm	4.58mm	4.98mm	5.77mm	6.59mm	7.42mm	8.28mm
(C) = 7mm	1.43mm	1.80mm	2.23mm	2.23mm	3.31mm	3.95mm	4.65mm	5.39mm	6.17mm	6.98mm	7.80mm

Hinge Cup

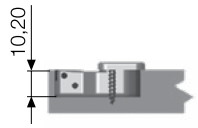

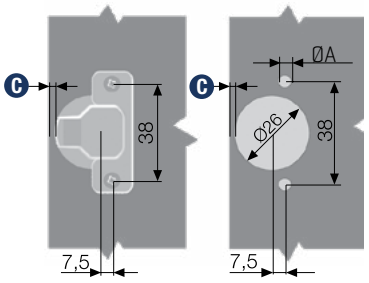

Drill Hole Dimensions	
Cup Dimension	35mm
Axis Dimension	45mm

Fastener Options

0A (mm) = Chipboard Screw
02,5x5 / Euro Screw
05x12 / (08-10) Dowel
(08-10)x12 , Easy Fit; 10x12

KV 90°/45° Hinge

90°

45°

Features

Application: Blind Corner / Diagonal Wooden
Hinge Mount Type: 90°- Inset / 45° - Varies by application
Degree of Opening: 110° Diagonal / 95° Blind Corner
Special Applications: Angular Cabinets
Cup Diameter: 35mm
Cup Depth: 12,5mm
Mounting Type: Woodscrew, 8mm Dowel, 8mm Exp. Dowel
Diameter of Mounting Hole: 35mm
Closing: Soft-Close / Self-Close
Adjustments: 6-way height, side and depth adjustment
Depth Adjustment: +3.0/-2.0mm
Min. Door Thickness: 16mm
Max. Door Thickness: 24mm
Door Material: Wood
Drilling Pattern: 45mm

For both frameless and face frame applications, see Mounting Plate options

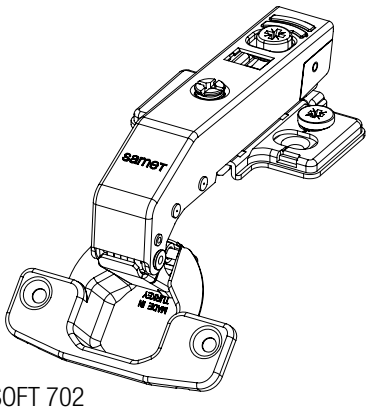

Features: KVSHB SOFT 702

Configurations

Standard		125 eaches per carton	
KV Hinge +45° Diagonal			
Mounting Type	**Closing**	**Overlay**	**Part**
Woodscrew	Soft-Close	Varies by application	KVSHB SOFT 701
8mm Dowel	Soft-Close	Varies by application	KVSHB SOFT 705
8mm Exp. Dowel	Soft-Close	Varies by application	KVSHB SOFT 706
Woodscrew	Self-Close	Varies by application	KVSHB SELF 703
8mm Dowel	Self-Close	Varies by application	KVSHB SELF 709
8mm Exp. Dowel	Self-Close	Varies by application	KVSHB SELF 710
KV Hinge 90° Blind Corner			
Mounting Type	**Closing**	**Overlay**	**Part**
Woodscrew	Soft-Close	Inset	KVSHB SOFT 702
8mm Dowel	Soft-Close	Inset	KVSHB SOFT 707
8mm Exp. Dowel	Soft-Close	Inset	KVSHB SOFT 708
Woodscrew	Self-Close	Inset	KVSHB SELF 704
8mm Dowel	Self-Close	Inset	KVSHB SELF 711
8mm Exp. Dowel	Self-Close	Inset	KVSHB SELF 712

Decorative Cover		
Type	**Pack**	**Part**
Hinge Arm Decorative Cover	250 eaches	KVSHB DC 311
Hinge Cup Decorative Cover	250 eaches	KVSHB DC 310

KV 90°/45° Hinge Cup

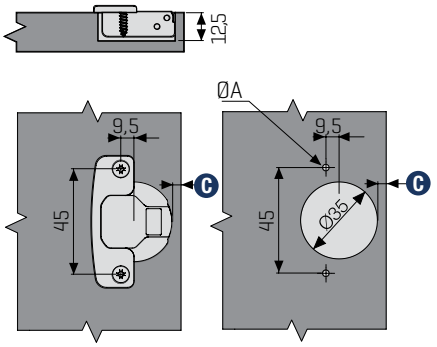

Drill Hole Dimensions	
Cup Dimension	35mm
Axis Dimension	45mm

Fastener Options

0A (mm) = Chipboard Screw
02,5x5 / Euro Screw
05x12 / (08-10) Dowel
(08-10)x12 , Easy Fit; 10x12

KNAPE&VOGT
POWERED BY samet

KV 90°/45° Hinge

KV 90° Hinge Application Alternatives

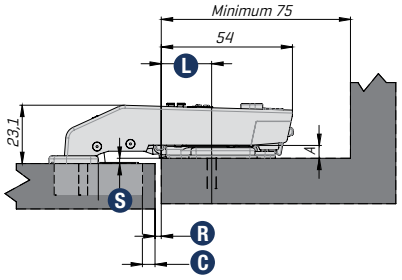

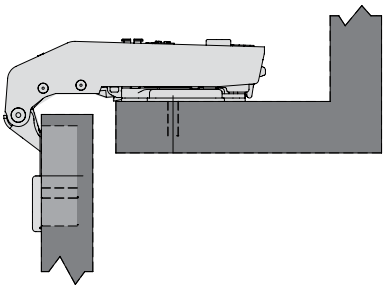

C =5	L =20	M =5	S =2	R =2
C =4	L =20	M =5	S =2	R =3

* S dimension should be minimum 0,5mm

- C 3–5mm (Cup Distance to Edge of Door)
- L Distance from cabinet opening to center of hinge mounting plate holes
- M 5mm, 7mm, 9mm (Mounting Plate Height)
- S Side Coverage (mm) Cabinet Wall
- R Reveal (Cabinet Wall Exposed)

KV 45° Hinge Application Alternatives

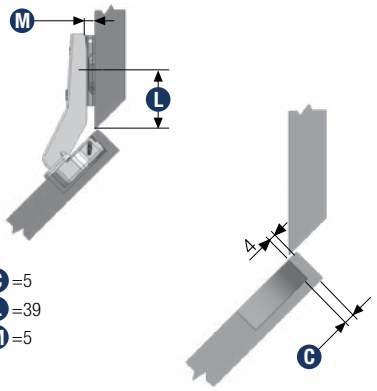

C =5
L =39
M =5

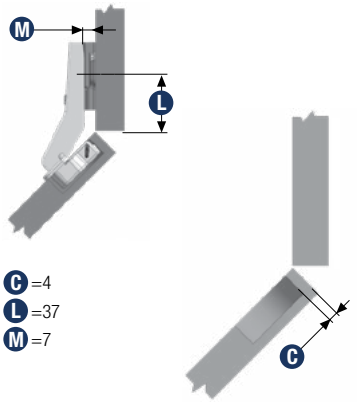

C =4
L =37
M =7

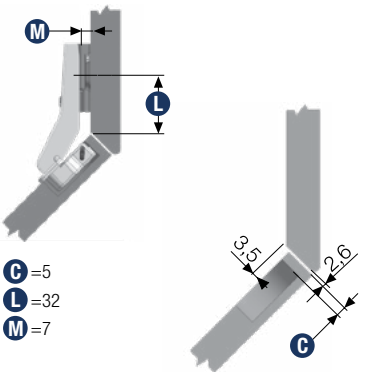

C =5
L =32
M =7

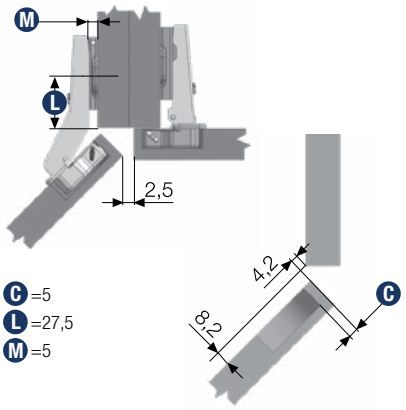

C =5
L =27,5
M =5

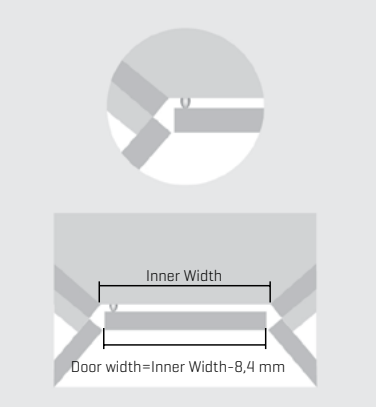

Mounting Plates

Woodscrew
Face Frame

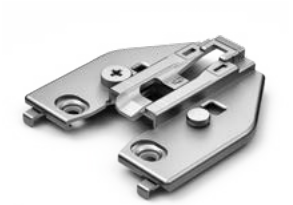

Woodscrew
Face Frame

Euro Screw
Pre-mounted

Plastic Dowel

Type	Pack	Part
MASTER / KV 5MM ADJUSTABLE MOUNTING PLATE WOODSCREW	125 eaches	KVSHB MP 210
MASTER / KV 5MM ADJUSTABLE MOUNTING PLATE PM EURO SCREW 6.3MMX14MM	125 eaches	KVSHB MP 211
MASTER / KV 5MM ADJUSTABLE MOUNTING PLATE 5MMX7.5MM EXP DOWEL	125 eaches	KVSHB MP 212
MASTER / KV 5MM ADJUSTABLE MOUNTING PLATE 5MMX11.5MM EXP DOWEL	125 eaches	KVSHB MP 213
MASTER / KV 7MM ADJUSTABLE MOUNTING PLATE WOODSCREW	125 eaches	KVSHB MP 214
MASTER / KV 7MM ADJUSTABLE MOUNTING PLATE PM EURO SCREW 6.3MMX14MM	125 eaches	KVSHB MP 215
MASTER / KV 7MM ADJUSTABLE MOUNTING PLATE 5MMX7.5MM EXP DOWEL	125 eaches	KVSHB MP 216
MASTER / KV 7MM ADJUSTABLE MOUNTING PLATE 5MMX11.5MM EXP DOWEL	125 eaches	KVSHB MP 217
MASTER / KV 9MM ADJUSTABLE MOUNTING PLATE WOODSCREW	125 eaches	KVSHB MP 218
MASTER / KV 9MM ADJUSTABLE MOUNTING PLATE PM EURO SCREW 6.3MMX14MM	125 eaches	KVSHB MP 219
MASTER / KV 9MM ADJUSTABLE MOUNTING PLATE 5MMX7.5MM EXP DOWEL	125 eaches	KVSHB MP 220
MASTER / KV 9MM ADJUSTABLE MOUNTING PLATE 5MMX11.5MM EXP DOWEL	125 eaches	KVSHB MP 221
MASTER / KV / STAR TRACK 5MM MOUNTING PLATE PM EURO SCREW 4-HOLE 6.3MMX14MM	125 eaches	KVSHB MP 110
MASTER / KV / STAR TRACK 7MM MOUNTING PLATE PM EURO SCREW 4-HOLE 6.3MMX14MM	125 eaches	KVSHB MP 111
MASTER / KV / STAR TRACK 9MM MOUNTING PLATE PM EURO SCREW 4-HOLE 6.3MMX14MM	125 eaches	KVSHB MP 112
MASTER / KV / STAR TRACK 5MM ADJ FACE FRAME ADAPTER MOUNTING PLATE WOODSCREW	125 eaches	KVSHB MPA 114
MASTER / KV / STAR TRACK 9MM ADJ FACE FRAME ADAPTER MOUNTING PLATE WOODSCREW	125 eaches	KVSHB MPA 115
MASTER / KV / STAR TRACK 9MM FACE FRAME ADAPTER MOUNTING PLATE WOODSCREW	125 eaches	KVSHB MPA 113
MASTER / KV ADJUSTABLE INSET FACE FRAME ADAPTER MOUNTING PLATE WOODSCREW	125 eaches	KVSHB MPA 104

KNAPE&VOGT
POWERED BY samet

Lifting Systems

Solo Mech 76
Performa Lid Stay 77
Gas Spring Lifter 77

Solo Mech

Solo-Mech hingeless Lift systems are the KV powered by Samet solution for single, lift-up doors. Solo-Mech has three lifter options based on cabinet door weights.

All systems feature three-dimensional alignment mechanisms allowing installers to achieve the perfect placement in cabinets with adjustments for vertical, horizontal, and front/back for perfect installation.

Solo-Mech provides color options and provides seamless design when combined with Flowbox, KV powered by Samet's premier drawbox system product.

Features

- Premium lifter system for single panel doors
- Fully mechanical coil spring lifting mechanism
- Up to 30 LB (14 kg) loading capacity
- Toolless assembly and disassembly of doors with the Track mechanism
- Opening angle options 107° and 90°
- Four color options: Anthracite, gray, mocha and white

Configurations

Pack	1 pair
Solo Mech White	
Power Unit	**Part**
A1	KVSL A WH
B1	KVSL B WH
C1	KVSL C WH
Solo Mech Gray	
Power Unit	**Part**
A1	KVSL A GR
B1	KVSL B GR
C1	KVSL C GR
Solo Mech Anthracite	
Power Unit	**Part**
A1	KVSL A AN
B1	KVSL B AN
C1	KVSL C AN
Solo Mech Mocha	
Power Unit	**Part**
A1	KVSL A MC
B1	KVSL B MC
C1	KVSL C MC

Solo Mech Template	
Description	**Part**
Solo-Mech Lift Drilling Template	KVSLB DT

	Solo Mech Power Unit					
	A1		B1		C1	
	MIN LB	MAX LB	MIN LB	MAX LB	MIN LB	MAX LB
Door Height						
7-7/8" (200 mm)	7.9	14.3	11	21.4	15.4	32.4
7-29/32" - 9-27/32" (201-250 mm)	7.5	11.7	8.8	16.5	21.1	26.9
9-7/8" - 11-13/16" (251-300 mm)	4.2	10.8	6.6	13	9.9	21.8
11-27/32" - 13-25/32" (301-350 mm)	3.5	7.9	6.2	11	8.8	17.4
13-13/16" - 15-3/4" (351-400 mm)	3.1	6.8	5.3	9.3	7.9	15.9
15-25/32" - 17-23/32" (401-450 mm)	2.9	6.2	4.9	8.4	7.1	13.9
17-3/4" - 19-11/16" (451-500 mm)	2.6	5.5	4.4	7.5	6.2	12.1
19-23/32" - 21-21/32" (501-550 mm)	2.2	4.9	3.9	6.6	5.7	11.2
21-11/16" - 23	2.1	4.4	3.7	6.2	5.5	10.1

KNAPE&VOGT®
POWERED BY samet™

Performa Lid Stay

Features

- Designed for lift-up and drop-down door applications
- Application includes use wooden doors and aluminum/glass doors
- The simple closing force adjustment – with the turn of a screw
- Unhanded design for easy installation
- Left/Right side usage is suggested for optimum performance

Configurations

Standard	100 eaches per carton
Performa Lid Stay	
Description	**Part**
37AX Nickel	KVSLB LS

Gas Spring Lifter

Features

- For lift-up doors applications
- Adjustable opening angle
- Four different force options according to door weight
- Left/Right side usage is suggested for optimum performance

Configurations

Standard	100 eaches per carton
Gas Spring Lifter	
Description	**Part**
80N Gray	KVSLB 80N GR
100N Gray	KVSLB 100N GR
120N Gray	KVSLB 120N GR
60N Gray	KVSLB 60N GR

Maximum Door Weight Ratio	
1	**0.225**
Newtons	Pounds
60	13.5
80	18.0
100	22.5
120	27.0

Drawer Box Systems

Flowbox 79
Flowbox Upgrades 81
Alphabox 83
Smart Box 84
Rollbox 85
Sam Box 86

KNAPE&VOGT®
POWERED BY samet™

Download at www.kv.com > Resource Library

Flowbox

KV Powered by Samet Premium Drawer Box System. Provides the most options for a custom look. Features 3D adjustments (including front panel tilt), five finish options. (Standard finishes: White and Anthracite) and four drawer heights. Options for drawer height extension with either side rails or glass panels

Features

Slide System: Undermount
Side Panel Thickness: Double-wall, thin
Drawer Height (Total): 106mm, 192mm
Drawer Lengths: 270mm–600mm
Open/Close Options: Soft-close
Adjustments: 3D: L/R (3mm), Vertical (4mm), Tilt (front/back) (3mm)
Drawer Bottom Thickness: 16mm, 18mm
Back Panel Thickness (Wood): 16mm, 18mm
Finish Options: White, Anthracite, Black*, Mocha*, Inox*
Optional Side Rails: Yes
Optional Glass Panels: Yes
Package Includes: Left / Right Soft-Close Drawer Slide (varies by length), Left / Right Color Side Panel, 2 Decoration Covers, 2 Front Side Connection Furnishings

Configurations

Flowbox (Standard)				
Drawer Height	**Drawer Length**	**Finish**	**Pack**	**Part**
106/16	270mm	Anthracite	1 set	KVSDBB 7570 AN
106/16	270mm	Black	1 set	KVSDBB 7569 EB
106/16	270mm	Mocha	1 set	KVSDBB 7568 MC
106/16	270mm	White	1 set	KVSDBB 7567 WH
106/16	300mm	Anthracite	1 set	KVSDBB 7566 AN
106/16	300mm	Black	1 set	KVSDBB 7565 EB
106/16	300mm	Mocha	1 set	KVSDBB 7564 MC
106/16	300mm	White	1 set	KVSDBB 7563 WH
106/16	350mm	Anthracite	1 set	KVSDBB 7562 AN
106/16	350mm	Black	1 set	KVSDBB 7561 EB
106/16	350mm	Mocha	1 set	KVSDBB 7560 MC
106/16	350mm	White	1 set	KVSDBB 7559 WH
106/16	400mm	Anthracite	1 set	KVSDBB 7558 AC
106/16	400mm	Black	1 set	KVSDBB 7557 EB
106/16	400mm	Mocha	1 set	KVSDBB 7556 MC
106/16	400mm	White	1 set	KVSDBB 7555 WH
106/16	450mm	Anthracite	1 set	KVSDBB 7554 AN
106/16	450mm	Black	1 set	KVSDBB 7553 EB
106/16	450mm	Mocha	1 set	KVSDBB 7552 MC
106/16	450mm	White	1 set	KVSDBB 7551 WH
106/16	500mm	Anthracite	1 set	KVSDBB 7550 AN
106/16	500mm	Black	1 set	KVSDBB 7549 EB
106/16	500mm	Mocha	1 set	KVSDBB 7548 MC
106/16	500mm	White	1 set	KVSDBB 7547 WH
106/16	550mm	Anthracite	1 set	KVSDBB 7546 AN
106/16	550mm	Black	1 set	KVSDBB 7545 EB
106/16	550mm	Mocha	1 set	KVSDBB 7544 MC
106/16	550mm	White	1 set	KVSDBB 7543 WH
106/16	600mm	Anthracite	1 set	KVSDBB 7542 AN
106/16	600mm	Black	1 set	KVSDBB 7541 EB
106/16	600mm	Mocha	1 set	KVSDBB 7540 MC
106/16	600mm	White	1 set	KVSDBB 7539 WH
192/16	270mm	Anthracite	1 set	KVSDBB 7534 AN
192/16	270mm	Black	1 set	KVSDBB 7533 EB
192/16	270mm	Mocha	1 set	KVSDBB 7532 MC

Flowbox (Standard)				
Drawer Height	**Drawer Length**	**Finish**	**Pack**	**Part**
192/16	270mm	White	1 set	KVSDBB 7531 WH
192/16	300mm	Anthracite	1 set	KVSDBB 7530 AN
192/16	300mm	Black	1 set	KVSDBB 7529 EB
192/16	300mm	Mocha	1 set	KVSDBB 7528 MC
192/16	300mm	White	1 set	KVSDBB 7527 WH
192/16	350mm	Anthracite	1 set	KVSDBB 7526 AN
192/16	350mm	Black	1 set	KVSDBB 7525 EB
192/16	350mm	Mocha	1 set	KVSDBB 7524 MC
192/16	350mm	White	1 set	KVSDBB 7523 WH
192/16	400mm	Anthracite	1 set	KVSDBB 7522 AN
192/16	400mm	Black	1 set	KVSDBB 7521 EB
192/16	400mm	Mocha	1 set	KVSDBB 7520 MC
192/16	400mm	White	1 set	KVSDBB 7519 WH
192/16	450mm	Anthracite	1 set	KVSDBB 7518 AN
192/16	450mm	Black	1 set	KVSDBB 7517 EB
192/16	450mm	Mocha	1 set	KVSDBB 7516 MC
192/16	450mm	White	1 set	KVSDBB 7515 WH
192/16	500mm	Anthracite	1 set	KVSDBB 7514 AN
192/16	500mm	Black	1 set	KVSDBB 7513 EB
192/16	500mm	Mocha	1 set	KVSDBB 7512 MC
192/16	500mm	White	1 set	KVSDBB 7511 WH
192/16	550mm	Anthracite	1 set	KVSDBB 7510 AN
192/16	550mm	Black	1 set	KVSDBB 7509 EB
192/16	550mm	Mocha	1 set	KVSDBB 7508 MC
192/16	550mm	White	1 set	KVSDBB 7507 WH
192/16	600mm	Anthracite	1 set	KVSDBB 7506 AN
192/16	600mm	Black	1 set	KVSDBB 7505 EB
192/16	600mm	Mocha	1 set	KVSDBB 7504 MC
192/16	600mm	White	1 set	KVSDBB 7503 WH

*Non-stock item – minimum order quantities and additional lead time may apply.

KNAPE&VOGT
POWERED BY samet

Flowbox

Configurations

Flowbox (Side Bulk)				
Drawer Height	**Drawer Length**	**Finish**	**Pack**	**Part**
106/16	450mm	White	128 set	KVSDBB 7410 WH
106/16	450mm	Anthracite	128 Set	KVSDBB 7411 AN
106/16	500mm	White	112 Set	KVSDBB 7408 WH
106/16	500mm	Anthracite	112 Set	KVSDBB 7409 AN
106/16	550mm	White	112 Set	KVSDBB 7406 WH
106/16	550mm	Anthracite	112 Set	KVSDBB 7407 AN
192/16	450mm	White	65 Set	KVSDBB 7404 WH
192/16	450mm	Anthracite	65 Set	KVSDBB 7405 AN
192/16	500mm	White	56 Set	KVSDBB 7402 WH
192/16	500mm	Anthracite	56 Set	KVSDBB 7403 AN
192/16	550mm	White	56 Set	KVSDBB 7400 WH
192/16	550mm	Anthracite	56 Set	KVSDBB 7401 AN

Flowbox (Slide Bulk)		
Type	**Pack**	**Part**
450mm	128 Set	KVSDBB 7502
500mm	112 Set	KVSDBB 7501
550mm	112 Set	KVSDBB 7500

Flowbox (Connectors)		
Type	**Pack**	**Part**
Drawer Front Connector Woodscrew	500 pcs	KVSDBB 8101
Drawer Front Connector 10mm Ext Dowel	500 pcs	KVSDBB 8102
Drawer Front Connector Upper H192 Woodscrew	500 pcs	KVSDBB 7100
Drawer Front Connector Upper H192 10mm Ext Dowel	500 pcs	KVSDBB 7101

Decorative Cover		
Type	**Pack**	**Part**
Decorative Covers Inner White	1000 pcs	KVSDBB 7102 WH
Decorative Covers Inner Anthracite	1000 pcs	KVSDBB 7103 AN
Decorative Covers Outer White KV Logo	1000 pcs	KVSDBB 7104 WH
Decorative Covers Outer Anthracite KV Logo	1000 pcs	KVSDBB 7105 AN

Flowbox Upgrades

Configurations

Flowbox Gallery Railing			
Drawer Length	**Finish**	**Pack**	**Part**
270mm	White	12 Set	KVSDBB 7728 WH
270mm	Black	12 Set	KVSDBB 7730 EB
270mm	Mocha	12 Set	KVSDBB 7729 MC
270mm	Anthracite	12 Set	KVSDBB 7731 AN
300mm	White	12 Set	KVSDBB 7724 WH
300mm	Black	12 Set	KVSDBB 7726 EB
300mm	Mocha	12 Set	KVSDBB 7725 MC
300mm	Anthracite	12 Set	KVSDBB 7727 AN
350mm	White	12 Set	KVSDBB 7720 WH
350mm	Black	12 Set	KVSDBB 7722 EB
350mm	Mocha	12 Set	KVSDBB 7721 MC
350mm	Anthracite	12 Set	KVSDBB 7723 AN
400mm	White	12 Set	KVSDBB 7716 WH
400mm	Black	12 Set	KVSDBB 7718 EB
400mm	Mocha	12 Set	KVSDBB 7717 MC
400mm	Anthracite	12 Set	KVSDBB 7719 AN
450mm	White	12 Set	KVSDBB 7712 WH
450mm	Black	12 Set	KVSDBB 7714 EB
450mm	Mocha	12 Set	KVSDBB 7713 MC
450mm	Anthracite	12 Set	KVSDBB 7715 AN
500mm	White	12 Set	KVSDBB 7708 WH
500mm	Black	12 Set	KVSDBB 7710 EB
500mm	Mocha	12 Set	KVSDBB 7709 MC
500mm	Anthracite	12 Set	KVSDBB 7711 AN
550mm	White	12 Set	KVSDBB 7704 WH
550mm	Black	12 Set	KVSDBB 7706 EB
550mm	Mocha	12 Set	KVSDBB 7705 MC
550mm	Anthracite	12 Set	KVSDBB 7707 AN
600mm	White	12 Set	KVSDBB 7700 WH
600mm	Black	12 Set	KVSDBB 7702 EB
600mm	Mocha	12 Set	KVSDBB 7701 MC
600mm	Anthracite	12 Set	KVSDBB 7703 AN

Flowbox Glass Side Panel			
Drawer Length	**Finish**	**Pack**	**Part**
270mm	White	1 Set	KVSDBB 7628 WH
270mm	Black	1 Set	KVSDBB 7630 EB
270mm	Mocha	1 Set	KVSDBB 7629 MC
270mm	Anthracite	1 Set	KVSDBB 7631 AN
300mm	White	1 Set	KVSDBB 7624 WH
300mm	Black	1 Set	KVSDBB 7626 EB
300mm	Mocha	1 Set	KVSDBB 7625 MC
300mm	Anthracite	1 Set	KVSDBB 7627 AN
350mm	White	1 Set	KVSDBB 7620 WH
350mm	Black	1 Set	KVSDBB 7622 EB
350mm	Mocha	1 Set	KVSDBB 7621 MC
350mm	Anthracite	1 Set	KVSDBB 7623 AN
400mm	White	1 Set	KVSDBB 7616 WH
400mm	Black	1 Set	KVSDBB 7618 EB
400mm	Mocha	1 Set	KVSDBB 7617 MC
400mm	Anthracite	1 Set	KVSDBB 7619 AN
450mm	White	1 Set	KVSDBB 7612 WH
450mm	Black	1 Set	KVSDBB 7618 EB
450mm	Mocha	1 Set	KVSDBB 7613 MC
450mm	Anthracite	1 Set	KVSDBB 7615 AN
500mm	White	1 Set	KVSDBB 7608 WH
500mm	Black	1 Set	KVSDBB 7610 EB
500mm	Mocha	1 Set	KVSDBB 7609 MC
500mm	Anthracite	1 Set	KVSDBB 7611 AN
550mm	White	1 Set	KVSDBB 7604 WH
550mm	Black	1 Set	KVSDBB 7606 EB
550mm	Mocha	1 Set	KVSDBB 7605 MC
550mm	Anthracite	1 Set	KVSDBB 7607 AN
600mm	White	1 Set	KVSDBB 7600 WH
600mm	Black	1 Set	KVSDBB 7602 EB
600mm	Mocha	1 Set	KVSDBB 7601 MC
600mm	Anthracite	1 Set	KVSDBB 7603 AN

Flowbox Cutlery Trays Invaria SC		
Size	**Pack**	**Part**
450X450	1 Set	KVSDBB 8800
450X600	1 Set	KVSDBB 8801
450X900	1 Set	KVSDBB 8802
450X1200	1 Set	KVSDBB 8803
500X450	1 Set	KVSDBB 8804
500X600	1 Set	KVSDBB 8805
500X900	1 Set	KVSDBB 8806
500X1200	1 Set	KVSDBB 8807

Flowbox Cutlery Trays Invaria SE		
Size	**Pack**	**Part**
450X600	1 Set	KVSDBB 8809
450X900	1 Set	KVSDBB 8810
450X1200	1 Set	KVSDBB 8811
500X600	1 Set	KVSDBB 8812
500X900	1 Set	KVSDBB 8813
500X1200	1 Set	KVSDBB 8814

*Non-stock item – minimum order quantities and additional lead time may apply.

Flowbox Upgrades

Configurations

Flowbox In-Box Dividers		
Finish	**Pack**	**Part**
White	20 pcs	KVSDBB 7900 WH
Black	20 pcs	KVSDBB 7901 EB
Mocha	20 pcs	KVSDBB 7902 MC
Anthracite	20 pcs	KVSDBB 7903 AN

Flowbox In-Box Front Panel Holders Without Gallery Railing			
Drawer Height	**Finish**	**Pack**	**Part**
106/16	White	12 Set	KVSDBB 7800 WH
106/16	Black	12 Set	KVSDBB 7801 EB
106/16	Mocha	12 Set	KVSDBB 7802 MC
106/16	Anthracite	12 Set	KVSDBB 7803 AN

Flowbox In-Box Front Panel Holders With Side/Front Gallery Railing			
Drawer Height	**Finish**	**Pack**	**Part**
106/16	White	12 Set	KVSDBB 7804 WH
106/16	Black	12 Set	KVSDBB 7805 EB
106/16	Mocha	12 Set	KVSDBB 7806 MC
106/16	Anthracite	12 Set	KVSDBB 7807 AN

Flowbox In-Box Front Panel Holders With Front Gallery Railing			
Drawer Height	**Finish**	**Pack**	**Part**
192/16	White	12 Set	KVSDBB 7808 WH
192/16	Black	12 Set	KVSDBB 7809 EB
192/16	Mocha	12 Set	KVSDBB 7810 MC
192/16	Anthracite	12 Set	KVSDBB 7811 AN

Flowbox In-Box Drawer Dividing Bar Holders		
Finish	**Pack**	**Part**
White	50 pcs	KVSDBB 7904 WH
Black	50 pcs	KVSDBB 7905 EB
Mocha	50 pcs	KVSDBB 7906 MC
Anthracite	50 pcs	KVSDBB 7907 AN

Flowbox In-Box Front Gallery Railing			
Drawer Width	**Finish**	**Pack**	**Part**
1111mm	White	12 pcs	KVSDBB 7817 WH
1111mm	Black	12 pcs	KVSDBB 7818 EB
1111mm	Mocha	12 pcs	KVSDBB 7819 MC
1111mm	Anthracite	12 pcs	KVSDBB 7820 AN

Flowbox In-Box Drawer Dividing Bar			
Drawer Width	**Finish**	**Pack**	**Part**
1121mm	White	10 pcs	KVSDBB 7908 WH
1121mm	Black	10 pcs	KVSDBB 7909 EB
1121mm	Mocha	10 pcs	KVSDBB 7910 MC
1121mm	Anthracite	10 pcs	KVSDBB 7911 AN

Flowbox In-Box Front Panel Without Gallery Railing				
Drawer Width	**Drawer Height**	**Finish**	**Pack**	**Part**
1044mm	106/16	White	12 pcs	KVSDBB 7812 WH
1044mm	106/16	Black	12 pcs	KVSDBB 7813 EB
1044mm	106/16	Mocha	12 pcs	KVSDBB 7814 MC
1044mm	106/16	Anthracite	12 pcs	KVSDBB 7815 AN

Flowbox In-Box Front Panel With Gallery Railing				
Drawer Width	**Drawer Height**	**Finish**	**Pack**	**Part**
1044mm	106/16 & 192/16	White	12 pcs	KVSDBB 7816 WH
1044mm	106/16 & 192/16	Black	12 pcs	KVSDBB 7821 EB
1044mm	106/16 & 192/16	Mocha	12 pcs	KVSDBB 7822 MC
1044mm	106/16 & 192/16	Anthracite	12 pcs	KVSDBB 7823 AN

Flowbox Sink Drawers				
Size	**Drawer Height**	**Finish**	**Pack**	**Part**
900x500	106/16	White	1 Set	KVSDBB 7535 WH
900x500	106/16	Black	1 Set	KVSDBB 7537 EB
900x500	106/16	Mocha	1 Set	KVSDBB 7536 MC
900x500	106/16	Anthracite	1 Set	KVSDBB 7538 AN

Flowbox Tools	
Type	**Part**
Tabletop Drawer Assembly Machine	KVSDBB 1000
Drawer Front Marking Template	KVSDBB 1002

KNAPE&VOGT®

POWERED BY samet™

*Non-stock item – minimum order quantities and additional lead time may apply.

Download at www.kv.com > Resource Library

Alphabox

Alphabox offers style and configuation possibilities with contemporary side wall extensions. It features slim, molded side panels. Available with soft close, push-to-open and push-to-open/soft close drawer closure. Standard drawer height is 116mm/4.57" - greater drawer depth is possible by adding optional side rails*** or glass panels.***

***See Flowbox upgrades.

Features

Slide System: Undermount
Side Panel Thickness: Double-wall, thin
Drawer Height (Total): 116mm
Drawer Lengths: 270mm–600mm
Open/Close Options: Soft-close, push-open*, push-open/soft-close*
Adjustments: 2D: L/R (3mm), Vertical (4mm)
Drawer Bottom Thickness: 16mm, 18mm
Back Panel Thickness (Wood): 16mm, 18mm
Finish Options: White, Gray, Anthracite
Optional Side Rails: Yes
Optional Glass Panels: Yes
Package Includes: Left / Right Undermount Drawer Slides, Left / Right Side Panels, 2 Front Panel Connector Hardware, Inner / Outer Decorative Plastic Covers

*Non-stock item – minimum order quantities and additional lead time may apply.

Configurations

Alphabox (Standard)				
Drawer Height	**Drawer Length**	**Finish**	**Pack**	**Part**
116/16	350mm	Gray	1 Set	KVSDBB 8700 GR
116/16	400mm	Gray	1 Set	KVSDBB 8701 GR
116/16	450mm	Gray	1 Set	KVSDBB 8702 GR
116/16	500mm	Gray	1 Set	KVSDBB 8703 GR
116/16	550mm	Gray	1 Set	KVSDBB 8704 GR

Alphabox (Gallery Rail)				
Type	**Drawer Length**	**Finish**	**Pack**	**Part**
Rail	350mm	Gray	12 set	KVSDBB 8900 GR
Rail	400mm	Gray	12 set	KVSDBB 8901 GR
Rail	450mm	Gray	12 set	KVSDBB 8902 GR
Rail	500mm	Gray	12 set	KVSDBB 8903 GR
Rail	550mm	Gray	12 set	KVSDBB 8904 GR

Smart Box

Smartbox is a solid performer providing dynamic load capacity of 88 lb. This full extension, undermount drawer system has adaptive damping to withstand the daily wear and tear of operation while preserving the drawer box and its contents. Optional side rails are available to create a deeper storage unit to manage taller items. Available in two colors (white and gray).

Features

Slide System: Undermount
Side Panel Thickness: Double-wall, thick
Drawer Height (Total): 100mm
Drawer Lengths: 270mm–650mm
Open/Close Options: Soft-close
Adjustments: 2D: L/R (3mm), Vertical (4mm)
Drawer Bottom Thickness: 16mm, 18mm
Finish Options: White, Gray
Optional Side Rails: Yes
Optional Glass Panels: No
Package Includes: Left / Right Drawer Slides, Left / Right Side Panels, 2 Outer Decorative Covers, 2 Front Panel Holders, Left / Right Back Panel Holders

Smartbox Accessory		
Type	**Pack**	**Part**
Smartbox Drawer Front Marking Template	–	KVSDBB 1001
Drawer Box Systems Drawer Front Stabilizer	250 pcs	KVSDBB 5100

Configurations

Smart Box (Standard)				
Drawer Height	**Drawer Length**	**Finish**	**Pack**	**Part**
16	350mm	Gray	1 Set	KVSDBB 5901 GR
16	350mm	White	1 Set	KVSDBB 5900 WH
16	400mm	Gray	1 Set	KVSDBB 5903 GR
16	400mm	White	1 Set	KVSDBB 5902 WH
16	450mm	Gray	1 Set	KVSDBB 5905 GR
16	450mm	White	1 Set	KVSDBB 5901.I WH
16	500mm	Gray	1 Set	KVSDBB 5907 GR
16	500mm	White	1 Set	KVSDBB 5906 WH
16	550mm	Gray	1 Set	KVSDBB 5909 GR
16	550mm	White	1 Set	KVS0BB 5908 WH
16	600mm	Gray	1 Set	KVSDBB 5911 GR
16	600mm	White	1 Set	KVSDBB 5910 WH
16	650mm	Gray	1 Set	KVSDBB 5913 GR
16	650mm	White	1 Set	KVSDBB 5912 WH

Smartbox Gallery Railing				
Type	**Drawer Length**	**Finish**	**Pack**	**Part**
Rail	450mm	White	20 Set	KVSDBB 5800 WH
Rail	450mm	Gray	20 Set	KVSDBB 5801 GR
Rail	500mm	White	20 Set	KVSDBB 5802 WH
Rail	500mm	Gray	20 Set	KVSDBB 5803 GR
Rail	550mm	White	20 Set	KVSDBB 5804 WH
Rail	550mm	Gray	20 Set	KVSDBB 5805 GR

Smartbox Drawer Back Holder [LH/RH]				
Type	**Drawer Height**	**Finish**	**Pack**	**Part**
Single Gallery Railing	16mm	White	4 Set	KVSDBB 5700 WH
Single Railing	16mm	Gray	4 Set	KVSDBB 5701GR
Double Gallery Railing	16mm	White	4 Set	KVSDBB 5702 WH
Double Railing	16mm	Gray	4 Set	KVSDBB 5703 GR

KNAPE&VOGT
POWERED BY samet

Rollbox

Rollbox is KV powered by Samet's side-mount drawer box system. It has full-extension, ball bearing slides with soft close damping. Rollbox offers choice of two side panel heights in a seek, metallic finish. As with all KV powered by Samet drawbox systems, front panels can be easily removed for cleaning, repair or coating. Drawer fronts can always look fresh and like new without needing to replace the drawer unit.

Features

Slide System: Ball-Bearing
Side Panel Thickness: Double-wall
Drawer Height (Total): 87mm / 172mm
Drawer Lengths: 350mm–500mm
Open/Close Options: Soft-close
Adjustments: 2D: L/R (3mm), Vertical (4mm)
Drawer Bottom Thickness: 16mm, 18mm
Finish Options: Metallic Gray
Optional Side Rails: No
Optional Glass Panels: No
Package Includes: Left Side Rivet Installed 46-450mm Soft-Close Full Extention Drawer Slide RollBox + Grey Side Panel, Right Side Rivet Installed 46-450mm Soft Close Full Extention Drawer Slide RollBox + Grey Side Panel, 2 Internal Decoration Covers, 2 Front Side Connection Furnishings

Configurations

Rollbox (Standard)				
Drawer Height	**Drawer Length**	**Finish**	**Pack**	**Part**
87/16	350mm	Metallic Gray	1 Set	KVSDBB 6000 GR
87/16	400mm	Metallic Gray	1 Set	KVSDBB 6001 GR
87/16	450mm	Metallic Gray	1 Set	KVSDBB 6002 GR
87/16	500mm	Metallic Gray	1 Set	KVSDBB 6003 GR
87/16	450mm	Metallic Gray	1 Set	KVSDBB 6007 GR
87/16	500mm	Metallic Gray	1 Set	KVSDBB 6008 GR
87/16	550mm	Metallic Gray	1 Set	KVSDBB 6004 GR
87/16	350mm	Metallic Gray	1 Set	KVSDBB 6005 GR
87/16	400mm	Metallic Gray	1 Set	KVSDBB 6006 GR
87/16	550mm	Metallic Gray	1 Set	KVSDBB 6009 GR

Rollbox (Template)	
Type	**Part**
Drawer Front Marking Template	KVSDBB 1002

KNAPE&VOGT
POWERED BY samet

Sam Box

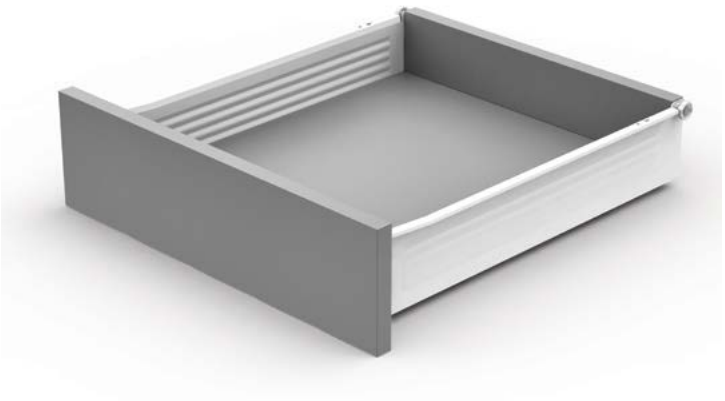

Sam Box is our economy drawer box system. Get the benefits of drawbox systems for your customers where low price is needed. Offers four drawer heights and uses rollerball glides.

Features

Slide System: Roller Ball
Side Panel Thickness: Single Wall
Drawer Height (Total): 54mm / 86mm / 118mm / 150mm
Drawer Lengths: 250mm–550mm
Open/Close Options: Self-close
Adjustments: 2D: L/R (3mm), Vertical (2mm)
Drawer Bottom Thickness: 16mm
Finish Options: White, Gray, Metallic
Optional Side Rails: No
Optional Glass Panels: No
Package Includes: Left / Right Roller Slides, Left / Right Side Panels, 2 Outer Decorative Covers, 2 Front Panel Connectors

Configurations

Sam Box (Drawer Front Connector)			
Type	**Drawer length**	**Pack**	**Part**
LH/RH Woodscrew	54mm	50 Set	KVSDBB 9105
LH/RH 10mm Dowel	54mm	50 Set	KVSDBB 9106
10mm Dowel	86mm/118mm/150mm	200 Pcs	KVSDBB 9108
Woodscrew	86mm/118mm/150mm	200 Pcs	KVSDBB 9109
Cover CAP	86mm/118mm/150mm	200 Pcs	KVSDBB 9110 WH

Sam Box (Accessory)		
Type	**Pack**	**Part**
Soft-close Mechanism	20 Set	KVSDBB 9107

Configurations

Sam Box Press Fix				
Drawer Height	**Drawer Length**	**Finish**	**Pack**	**Part**
54mm	400mm	White	10 Set	KVSDBB 9900 WH
54mm	450mm	White	10 Set	KVSDBB 9901 WH
54mm	500mm	White	10 Set	KVSDBB 9902 WH
54mm	550mm	White	10 Set	KVSDBB 9903 WH
86mm	250mm	White	10 Set	KVSDBB 9804 WH
86mm	300mm	White	10 Set	KVSDBB 9805 WH
86mm	350mm	White	10 Set	KVSDBB 9806 WH
86mm	400mm	White	10 Set	KVSDBB 9807 WH
86mm	450mm	White	10 Set	KVSDBB 9808 WH
86mm	500mm	White	10 Set	KVSDBB 9809 WH
86mm	550mm	White	10 Set	KVSDBB 9810 WH
118mm	300mm	White	5 Set	KVSDBB 9711 WH
118mm	350mm	White	5 Set	KVSDBB 9712 WH
118mm	400mm	White	5 Set	KVSDBB 9713 WH
118mm	450mm	White	5 Set	KVSDBB 9714 WH
118mm	500mm	White	5 Set	KVSDBB 9715 WH
118mm	550mm	White	5 Set	KVSDBB 9716 WH
150mm	300mm	White	5 Set	KVSDBB 9617 WH
150mm	350mm	White	5 Set	KVSDBB 9618 WH
150mm	400mm	White	5 Set	KVSDBB 9619 WH
150mm	450mm	White	5 Set	KVSDBB 9620 WH
150mm	500mm	White	5 Set	KVSDBB 9621 WH
150mm	550mm	White	5 Set	KVSDBB 9622 WH

Sam Box (Adapters)				
Type	**Drawer length**	**Finish**	**Pack**	**Part**
Folder Suspender	450mm	White	10 Set	KVSDBB 9100 WH
Folder Suspender	500mm	White	10 Set	KVSDBB 9101 WH
Folder Suspender	550mm	White	10 Set	KVSDBB 9102 WH
Lateral File Bar	1104mm	White	10 Set	KVSDBB 9103 WH
Single Adaptor	–	White	200 Set	KVSDBB 9104 WH
Double Adaptor	–	White	200 Set	KVSDBB 9111

KNAPE&VOGT®
POWERED BY samet™

Shelving

Adjustable Wall Shelving Quick Reference Guide 88
255™/256™ Series Mortise-Mount Pilaster Shelving System 89
233™/237™ Series Surface-Mount Pilaster Shelving System 91
71™/170™ Regular-Duty Standard and Bracket System. 92
80™/180™ Regular-Duty Standard and Bracket System. 93
82™/182™ Series Heavy-Duty Standard and Bracket System. 97
83™/183™ Series Heavy-Duty Standard and Bracket System. 99
85™/185™ Series Extra-Duty Standard and Bracket System 101
87™/186™/187™ Series Super-Duty Standard and Bracket System. . . .103
87™/186™/187™ Super-Duty Stainless Steel Standard and Bracket System 105
5mm Shelf Supports for Built-In Shelving 107
1/4" and 7/32" Shelf Supports and Grommets 108
Utility Shelving Brackets 109
Decorative Shelf Brackets. 110
201 Series SHELF-MADE® Exclusive™ Premium Decorative Shelf Brackets 111
200 Series Designer Decorative Shelf Brackets 113
Shelf Board 115

Adjustable Wall Shelving Quick Reference Guide

Knape and Vogt pioneered the development of the modern standards and bracket system of adjustable wall shelving, and we're still the leader in selection, quality and innovation. With one of the industry's widest selection of systems and component accessories, chances are we make a shelving system just right for you. To aid your selection process, we've created a comparison chart that lists the vital characteristics of our standards and bracket systems, as well as available finishes and accessories. If you still have questions or need more details, please contact KV Customer Service.

		Features						Finish Options											Pack Options			
Part	Description	1" Center Adjustment	1-1/4" Center Adjustment	2" Center Adjustment	Single Track	Double Track	Lock Lever	Anochrome (ANO)	Black (BLK)	Brass-look (BR)	Brown (BRN)	Clear (CL)	Stainless Steel (SS)	Galvanized Steel (GALV)	Titanium (TI)	White (WH)	Zinc (ZC)	Economy Zinc (E)	Standard Pack	Builders Pack (BP)	Display Pack (DP)	Hefty Pack (HP)
71/170 Regular-Duty Narrow Adjustable Standard and Bracket System																						
71	Narrow Faced Standard	•			•			•											•			
170	Bracket	•			•			•											•			
80/180 Regular-Duty Adjustable Standard and Bracket System																						
80	Standard	•			•			•	•	•	•				•	•			•	•		
180	Bracket	•			•			•	•	•	•				•	•			•	•		•
181	Lipless Bracket	•			•			•											•			
160LL	Lock Lever Bracket	•			•		•	•											•			
179	Adjustable Angle Bracket	•			•			•											•			
82/182 Heavy-Duty Adjustable Standard and Bracket System																						
82	Standard		•			•			•						•	•			•	•		
182	Bracket		•			•			•						•	•			•	•		
182BE	Bookend		•			•										•			•			
82DP Screw	Screws/Anchors																•				•	
182DP LCTR/JNR	Shelf Locater/Joiner											•									•	
182DP LOCK	Bracket Lock Tab		•			•			•												•	
83/183 Oversized Heavy-Duty Adjustable Standard and Bracket System																						
83	Oversized Standard	•			•			•											•			
183	Flange Bracket	•			•			•											•			
161LL	Lock Lever Bracket	•			•		•	•											•			
85/185 Extra-Duty Adjustable Standard and Bracket System																						
85	Standard	•				•		•								•			•			
185	Bracket	•				•		•								•			•			
106 ANO	Shelf Rest							•											•			
107 ANO	Hang Rod Clamp							•											•			
87/187 Super-Duty Adjustable Standard and Bracket System																						
87	Standard			•	•			•					•			•			•			
186LL	Lock Lever Bracket			•	•		•	•					•			•			•			
187LL	Lock Lever Bracket			•	•		•	•					•			•			•			
1987	Steel Shelves												•	•					•			

Download at www.kv.com > Resource Library

255™/256™ Series Mortise-Mount Pilaster Shelving System

- Holds up to 500 lbs. per shelf*
- 1/2" vertical slot adjustment
- Wide selection of finishes and sizes
- Limited lifetime warranty

255 Series Steel Standard

Dimensions: 5/8" width x 3/16" deep x selected length
Material: 23 gauge high strength steel
20 gauge galvanized steel: Economy Zinc (E) products only
Finish: Almond (ALM), Brass-look (BR), Brown (BRN), White (WH), Zinc (ZC), Economy Zinc (E)

Origin: Made in the USA
Features: Numbered slots for fast, accurate clip insertion; countersunk nail and screw holes; full finish coverage to deter corrosion and provide a uniform look; precision cut lengths; BHMA Grade 1 Compliant*

Pack Configurations

WOODWORK INSTITUTE

MADE IN USA

Standard	12"–60", packed 100 standards per carton; 72"–96", packed 50 standards per carton
Retail (PK)	20 standards per carton with UPC Labels

Size	Almond (ALM)	Brass-look (BR)	Brown (BRN)	Economy Zinc (E)	Ebony (EB)	White (WH)	Zinc (ZC)
255 Steel Standards Standard Pack							
12"	255 ALM 12	255 BR 12	255 BRN 12	255 E 12	255 EB 12	255 WH 12	255 ZC 12
18"	255 ALM 18	255 BR 18	255 BRN 18	–	255 EB 18	255 WH 18	255 ZC 18
24"	255 ALM 24	255 BR 24	255 BRN 24	255 E 24	255 EB 24	255 WH 24	255 ZC 24
30"	255 ALM 30	–	255 BRN 30	–	255 EB 30	255 WH 30	255 ZC 30
36"	255 ALM 36	255 BR 36	255 BRN 36	255 E 36	255 EB 36	255 WH 36	255 ZC 36
42"	–	–	–	–	255 EB 42	–	255 ZC 42
48"	255 ALM 48	255 BR 48	255 BRN 48	255 E 48	255 EB 48	255 WH 48	255 ZC 48
54"	–	–	–	–	255 EB 54	–	–
60"	255 ALM 60	255 BR 60	255 BRN 60	255 E 60	255 EB 60	255 WH 60	255 ZC 60
72"	255 ALM 72	255 BR 72	255 BRN 72	255 E 72	255 EB 72	255 WH 72	255 ZC 72
84"	255 ALM 84	255 BR 84	255 BRN 84	255 E 84	255 EB 84	255 WH 84	255 ZC 84
96"	255 ALM 96	255 BR 96	255 BRN 96	255 E 96	255 EB 96	255 WH 96	255 ZC 96
255 Steel Standards Retail Pack with UPC Labels (PK)							
24"	–	–	–	–	–	–	PK255 ZC 24
36"	–	PK255 BR 36	–	–	–	PK255 WH 36	PK255 ZC 36
48"	–	PK255 BR 48	–	–	–	PK255 WH 48	PK255 ZC 48
60"	–	PK255 BR 60	–	–	–	PK255 WH 60	PK255 ZC 60
72"	–	PK255 BR 72	–	–	–	PK255 WH 72	PK255 ZC 72

ALM RoHS BR RoHS BRN RoHS EB RoHS

WH RoHS ZC RoHS E RoHS

255 Series Aluminum Standard

Dimensions: 5/8" width x 3/16" deep x selected length
Material: 17 gauge aluminum
Finish: Natural (AL), Brass-look (BR), Brown (BRN), Walnut (WAL)

Origin: Made in the USA
Features: Numbered slots for fast, accurate clip insertion; countersunk nail and screw holes; made of rust resistant aluminum; full finish coverage to deter corrosion and provide a uniform look; precision cut lengths; BHMA Grade 3 Compliant*

Pack Configuration

WOODWORK INSTITUTE

MADE IN USA

Standard	12"–60", packed 100 standards per carton; 72"–96", packed 50 standards per carton

Size	Natural (AL)	Brass-look (BR)	Brown (BRN)	Walnut (WAL)
255 Aluminum Standards Standard Pack				
12"	255AL 12	255AL BR 12	255AL BRN 12	255AL WAL 12
18"	255AL 18	255AL BR 18	–	255AL WAL 18
24"	255AL 24	255AL BR 24	255AL BRN 24	255AL WAL 24
30"	255AL 30	255AL BR 30	–	255AL WAL 30
36"	255AL 36	255AL BR 36	255AL BRN 36	255AL WAL 36
48"	255AL 48	255AL BR 48	255AL BRN 48	255AL WAL 48
60"	255AL 60	255AL BR 60	255AL BRN 60	255AL WAL 60
72"	255AL 72	255AL BR 72	255AL BRN 72	255AL WAL 72
84"	255AL 84	255AL BR 84	255AL BRN 84	255AL WAL 84
96"	255AL 96	255AL BR 96	255AL BRN 96	255AL WAL 96

AL RoHS BR RoHS BRN RoHS WAL RoHS

Plated finish products only

Non-stock item – minimum order quantities and additional lead time may apply.

*Standards and brackets meet or exceed ANSI performance standards as established by BHMA testing requirements.

255™/256™ Series Mortise-Mount Pilaster Shelving System

256 Series Pilaster Shelf Support

Material: High-strength steel, Aluminum (AL)
Finish: Almond (ALM), Brass-look (BR), Walnut (WAL), White (WH), Zinc (ZC), Natural Aluminum (AL NAT)
Origin: Made in the USA
Features: Patented design; full coverage finish to resist corrosion; strength increasing dimple

Pack Configurations

Standard Pack	100 pieces per carton			
Bulk (B)	1000 pieces per carton			
Barrel (BBL)	9000 pieces per barrel			
Poly (P)	12 supports and 28 nails per bag; 10 bags per display carton			
Warehouse (WP)	12 supports and 28 nails per bag; 50 bags per display carton			
256 Shelf Supports Almond (ALM) Finish				
Standard	**Bulk (B)**	**Barrel (BBL)**	**Poly (P)**	**Warehouse (WP)**
256S ALM	–	–	–	–
256 Shelf Supports Brass-look (BR) Finish				
256 BR	256B BR	256BBL BR	256P BR	–
256 Shelf Supports Ebony (EB) Finish				
–	–	256BBL EB	–	–
256 Shelf Supports Walnut (WAL) Finish				
256 WAL	256B WAL	256BBL WAL	–	–
256 Shelf Supports White (WH) Finish				
256S WH	–	–	256S P WH	256S WP WH
256 Shelf Supports Zinc (ZC) Finish				
256 ZC	256B ZC	256BBL ZC	256P ZC	256WP ZC
256 Shelf Supports Natural Aluminum (AL NAT) Finish				
256 AL NAT	–	–	–	–

NOTE: Use 256 WAL with 255 BRN and 255AL WAL

ALM

AL NAT (Aluminum Material)

BR

EB

WAL

WH

ZC

Specialty Pilaster Shelf Supports

Part #:
- **256R ZC:** Support with Rubber Cushion
- **239 ZC*:** Shelf Support
- **24276 ZC:** Shelf Support with Mounting Hole
- **243 ZC:** 3" Shelf Bracket (non-handed)
- **244 ANO:** Wire Shelf Support
- **757 ANO:** Flange for 1-1/16" OD closet rod

Material: High-strength steel, cold rolled steel
Finish: Anochrome (ANO), Zinc (ZC)
Origin: Made in the USA
Packed: 100 per carton

256R

239

24276 (High-strength steel)

244

243

757

229 Series Support Bracket

Finish: Anochrome (ANO)
Packed: 25 per carton
Material: Cold rolled steel
Finish: Anochrome (ANO)
Origin: Made in the USA

229 Bracket	
Size	**Anochrome (ANO)**
4"	229 ANO 4
6"	229 ANO 6
8"	229 ANO 8
10"	229 ANO 10

Non-stock item – minimum order quantities and additional lead time may apply.

* WoodWork Institute Acknowledged Products

Download at www.kv.com > Resource Library

233™/237™ Series Surface-Mount Pilaster Shelving System

- Holds up to 500 lbs. per shelf*
- 1/2" vertical slot adjustability
- BHMA Grade 1 Compliant*
- Limited lifetime warranty

233 Surface Mount Steel Pilaster Standard

Dimensions: 13/16" width x 3/16" deep x selected height
Material: 23 gauge high-strength steel
Finish: Brass-look (BR), Steel (STL), Zinc (ZC)
Origin: Made in the USA
Features: Numbered slots for quick, accurate clip insertion; countersunk nail, screw and staple holes; full finish coverage to deter corrosion and provide a uniform look; precision cut lengths

Pack Configurations

Standard	12"–60" packed 100 standards per carton; 72"–96" packed 50 standards per carton

233 Series Steel Standards Standard Pack			
Size	**Brass-look (BR)**	**Steel (STL)**	**Zinc (ZC)**
12"	233 BR 12	233 STL 12	233 ZC 12
18"	–	–	233 ZC 18
24"	–	233 STL 24	233 ZC 24
36"	233 BR 36	233 STL 36	233 ZC 36
48"	233 BR 48	233 STL 48	233 ZC 48
60"	233 BR 60	233 STL 60	233 ZC 60
72"	233 BR 72	233 STL 72	233 ZC 72
96"	233 BR 96	233 STL 96	233 ZC 96

BR

ZC

Pilaster Shelf Supports

Part #: **237 ZC:** Shelf support for 233 pilaster
238 ANO: Shelf support with locator tab
242 ANO: Wire shelf support
Finish: Anochrome (ANO), Zinc (ZC)
Featured: Made in the USA
Packed: 100 pieces per carton
Features: Full finish coverage to deter corrosion and provide optimum asthetics

237

238

242

Nails for 255 and 233 Series Standards

Pack Configuration

Standard	Approximately 650 nails per bag; 5 bags per carton

255 and 233 Nails		
Part	**Finish**	**Use with:**
255-81N ALM	Almond (ALM)	255 ALM
255-81N BR	Brass-look (BR)	255 BR, 233 BR, 255AL BR
255-81N STB	Bronzed (STB)	255 BRN, 255 AL BRN, 255AL WAL
255-81N WH	White (WH)	255 WH
255-81N ZC	Zinc (ZC)	255 ZC, 233 ZC, 255E, 255AL

Non-stock item – minimum order quantities and additional lead time may apply.

*Standards and brackets meet or exceed ANSI performance standards as established by BHMA testing requirements.

71™/170™ Regular-Duty Standard and Bracket System

71 Series Narrow Standard

Dimensions: 5/16" wide x 13/32" deep x selected height
Material: 13 gauge steel
Finish: Anochrome (ANO)
Origin: Made in the USA
Features: Narrow design to fit between prefabricated wall panels for flush wall mount; countersunk screw holes; center aligned slots and screw holes; precision cut length

Pack Configuration

Standard	10 per carton
71 Series Standards	
Size	**Anochrome (ANO)**
12"	71 ANO 12
48"	71 ANO 48
60"	71 ANO 60
72"	71 ANO 72
96"	71 ANO 96

170 ANO Series Bracket

Material: 14 gauge steel
Finish: Anochrome (ANO)
Origin: Made in the USA
Features: Holds up to 210 lbs. per pair; two locking teeth; shelf retaining lip; stamped wing stablizer

Pack Configuration

Standard	10 per carton
170 ANO Series Brackets	
Size	**Anochrome (ANO)**
10"	170 ANO 10
12"	170 ANO 12
14"	170 ANO 14

Non-stock item – minimum order quantities and additional lead time may apply.

*Standards and brackets meet or exceed ANSI performance standards as established by BHMA testing requirements.

80™/180™ Regular-Duty Standard and Bracket System

- Single slot design
- 1" vertical slot adjustability
- BHMA Grade 2 Compliant*
- Limited lifetime warranty

80 Series Standards

Dimensions: 5/8" wide x 13/32" deep x selected length
Material: 16 gauge cold rolled steel
Finish: Anochrome (ANO), Black (BLK), Brass-look (BR), Brown (BN), Titanium (TI), White (WH)

Origin: Made in the USA
Features: Countersunk screw holes; safety lead-in at top of standards; embossed "up" and arrow to show correct orientation; center aligned slots and screw holes; full finish coverage to deter corrosion and provide optimum aesthetics; precision cut lengths

Pack Configurations

Standard	10 standards per carton, with UPC labels
Builders Pack (BP)	25 standards per carton, no UPC labels

80 Series Standards Standard Pack with UPC Labels

Size	Anochrome (ANO)	Black (BLK)	Brass-look (BR)	Titanium (TI)	White (WH)
12"	80 ANO 12	80 BLK 12	80 BR 12	80 TI 12	80 WH 12
18"	80 ANO 18	–	–	–	–
24"	80 ANO 24	80 BLK 24	80 BR 24	80 TI 24	80 WH 24
36"	80 ANO 36	80 BLK 36	80 BR 36	80 TI 36	80 WH 36
48"	80 ANO 48	80 BLK 48	80 BR 48	80 TI 48	80 WH 48
60"	80 ANO 60	80 BLK 60	80 BR 60	80 TI 60	80 WH 60
72"	80 ANO 72	80 BLK 72	80 BR 72	80 TI 72	80 WH 72
84"	80 ANO 84	–	–	–	–
96"	80 ANO 96	80 BLK 96	–	–	80 WH 96

80 Series Standards Builder Pack (BP)

Size	Anochrome (ANO)
24"	80BP ANO 24
36"	80BP ANO 36
48"	80BP ANO 48
60"	80BP ANO 60
72"	80BP ANO 72
84"	80BP ANO 84
96"	80BP ANO 96

ANO RoHS BLK RoHS BR RoHS

TI RoHS WH RoHS

Non-stock item – minimum order quantities and additional lead time may apply.

*Standards and brackets meet or exceed ANSI performance standards as established by BHMA testing requirements.

80™/180™ Regular-Duty Standard and Bracket System

180 Series Brackets

Material: 14 and 16 gauge cold rolled steel, spring steel
Finish: Anochrome (ANO), Black (BLK), Brass-look (BR), Brown (BN), Titanium (TI), White (WH)
Origin: Made in the USA
Features: Holds up to 320 lbs. per pair*; two complete locking teeth; spring steel clip for stability and friction lock; shelf retaining lip; full finish coverage to deter corrosion and provide optimum aesthetics

ANO RoHS

BLK RoHS

BR RoHS

TI RoHS

WH RoHS

Pack Configurations

Standard	10 brackets per carton with UPC labels attached
Hefty Pack (HP)	40 brackets per display carton, with UPC labels
Builders Pack (BP)	100 brackets per carton, no UPC labels

Size	Anochrome (ANO)	Black (BLK)	Brass-look (BR)	Titanium (TI)	White (WH)
180 Series Brackets Standard Pack with UPC Labels					
4"	180 ANO 4	180 BLK 4	–	–	180 WH 4
6"	180 ANO 6	180 BLK 6	180 BR 6	180 TI 6	180 WH 6
8"	180 ANO 8	180 BLK 8	180 BR 8	180 TI 8	180 WH 8
10"	180 ANO 10	180 BLK 10	180 BR 10	180 TI 10	180 WH 10
12"	180 ANO 12	180 BLK 12	180 BR 12	180 TI 12	180 WH 12
14"	180 ANO 14	180 BLK 14	180 BR 14	–	180 WH 14
16"	180 ANO 16	180 BLK 16	180 BR 16	180 TI 16	180 WH 16
18"	180 ANO 18	–	–	–	180 WH 18
20"	180 ANO 20	–	–	–	180 WH 20
180 Series Brackets Hefty Pack (HP) with UPC Labels					
6"	–	–	–	180HP TI 6	180HP WH 6
8"	180HP ANO 8	180HP BLK 8	–	180HP TI 8	180HP WH 8
10"	180HP ANO 10	180HP BLK 10	–	180HP TI 10	180HP WH 10
12"	180HP ANO 12	180HP BLK 12	–	180HP TI 12	180HP WH 12
16"	180HP ANO 16	180HP BLK 16	–	180HP TI 16	180HP WH 16
180 Series Brackets Builders Pack (BP)					
6"	180BP ANO 6				
8"	180BP ANO 8				
10"	180BP ANO 10				
12"	180BP ANO 12				
14"	180BP ANO 14				
16"	180BP ANO 16				
18"	180BP ANO 18				

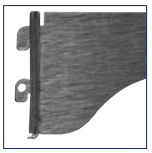

Locking Teeth and Retention Finger Side View

Screws and Anchors

Dimensions: #6 head, #8 body, 1-1/2" length
Finish: Anochrome (ANO), Black (BLK), Brown (BN), Brass-look (BR), Titanium (TI), White (WH), Zinc (ZC)
Features: For proper installation of 80 series standards; color matched finish for optimum aesthetics

Pack Configurations

Display Pack (DP)	20 poly bags per carton; each poly bag contains 6 screws and 6 screw anchors
Standard Pack	50 screws per pack, no anchors

Pack Type	Anochrome (ANO)	Black (BLK)	Brass-look (BR)	Titanium (TI)	White (WH)	Zinc (ZC)
80 Series Screw Packs						
Display Pack	80-88DP ANO	80-88DP BLK	80-88DP BR	80-88DP TI	80-88DP WH	–
Standard Pack	–	80-80 BLK	80-80 BR	–	80-80 WH	80-80 ZC

Non-stock item – minimum order quantities and additional lead time may apply.

*Standards and brackets meet or exceed ANSI performance standards as established by BHMA testing requirements.

80™/180™ Series Regular-Duty Standard and Bracket System

160LL™ Series Lock Lever Bracket

Material: 14 gauge cold rolled steel, nylon
Finish: Anochrome (ANO)
Origin: Made in the USA
Features: For use with 1" adjustable standards; two locking teeth; lever lock for extra secure mounting and stability; shelf retaining lip; full finish coverage to deter corrosion and provide optimum aesthetics

Pack Configuration

Standard	10 per carton, no UPC labels
160 Series Brackets	
Size	**Anochrome (ANO)**
6"	160LL ANO 6
8"	160LL ANO 8
10"	160LL ANO 10
12"	160LL ANO 12
14"	160LL ANO 14
16"	160LL ANO 16
18"	160LL ANO 18

RoHS

179™ Series Adjustable Angle Bracket

Material: 14 and 16 gauge cold rolled steel, spring steel
Finish: Anochrome (ANO)
Origin: Made in the USA
Features: For use with 1" adjustment standards; two complete locking teeth; shelf retaining lip; spring clip for stability and friction locking; adjust to 15°, 30°, 45° and level; full finish coverage to deter corrosion and provide optimum aesthetics

Pack Configuration

Standard	10 per carton, no UPC labels
179 Series Brackets	
Size	**Anochrome (ANO)**
10"	179 ANO 10
12"	179 ANO 12
14"	179 ANO 14

RoHS

181™ Series Lipless Bracket

Material: 14 and 16 gauge cold rolled steel, spring steel
Finish: Anochrome (ANO)
Origin: Made in the USA
Features: For use with 1" adjustment standards; two complete locking teeth; spring clip provides stability and a friction lock; lipless version of the 180 series bracket to allow for easy concealing of the bracket (fascia), full finish coverage to deter corrosion and provide optimum aesthetics

Pack Configuration

Standard	10 per carton, no UPC labels
181 Series Brackets	
Size	**Anochrome (ANO)**
8"	181 ANO 8
10"	181 ANO 10
12"	181 ANO 12
14"	181 ANO 14
16"	181 ANO 16

RoHS

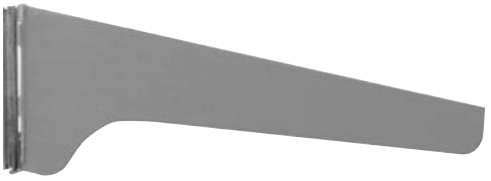

Non-stock item – minimum order quantities and additional lead time may apply.

80™/180™ Series Regular-Duty Standard and Bracket System

Accessories

Packed: 100 per carton

101 PLAS:	Clear plastic back rest with divider
102 PLAS:	Clear plastic front rest with divider
103 PLAS:	Clear plastic front rest
103-1/2L PLAS:	Clear plastic front rest left
103-1/2R PLAS:	Clear plastic front rest right
104 ANO:	Anochrome (ANO) steel back rest
104 PLAS:	Clear plastic back rest
104-1/2 PLAS:	Clear plastic back rest
119 RUB:	Gray rubber cushion use with metal rests
129 RUB:	Gray rubber cushion use with plastic rests
136 ANO**:	Socket-#80 standard bottom socket
137 ANO**	Socket-#80 standard top socket
154 ANO**	Shelf-fastener (fastens shelf to bracket)

101 PLAS

102 PLAS

103 PLAS

103-1/2

104 ANO

104 PLAS

104-1/2 PLAS

119 RUB

129 RUB

136**

137**

154**

**

MADE IN USA

82™/182™ Series Heavy-Duty Standard and Bracket System

- Double slot design
- 1-1/4" vertical slot adjustability
- BHMA Grade 2 Compliant*
- Limited lifetime warranty

82 Series Standard

Dimensions: 1-1/16" wide x 11/16" deep x selected length
Material: 14 gauge cold rolled steel
Finish: Black (BLK), Titanium (TI), White (WH)

Origin: Made in the USA
Features: European design asethetics; strength and stability enhancing ribs; countersunk screw holes; embossed "up" and arrow to show correct orientation; center aligned slots and screw holes; precision cut lengths; full finish coverage to deter corrosion and provide optimum aesthetics

Pack Configurations

WOODWORK INSTITUTE

MADE IN USA

Standard	10 standards per carton with UPC labels
Builders Pack (BP)	10 standards per carton, no UPC labels

82 Series Standards Standard Pack			
Size	**Black (BLK)**	**Titanium (TI)**	**White (WH)**
12"	82 BLK 12	82 TI 12	82 WH 12
16.5"	82 BLK 16.5	82 TI 16.5	82 WH 16.5
28"	82 BLK 28	82 TI 28	82 WH 28
39"	82 BLK 39	82 TI 39	82 WH 39
48"	82 BLK 48	82 TI 48	82 WH 48
63"	82 BLK 63	82 TI 63	82 WH 63
78"	82 BLK 78	82 TI 78	82 WH 78
94"	82 BLK 94	82 TI 94	82 WH 94
82 Series Standards Builders Pack (BP)			
16.5"	82BP BLK 16.5	–	82BP WH 16.5
28"	82BP BLK 28	–	82BP WH 28
39"	82BP BLK 39	–	82BP WH 39
48"	82BP BLK 48	–	82BP WH 48
63"	82BP BLK 63	–	82BP WH 63
78"	82BP BLK 78	–	82BP WH 78
94"	82BP BLK 94	–	82BP WH 94

BLK RoHS

TI RoHS

WH RoHS

Accessories

182BE Bookend**

Finish: White (WH)
Packed: 10 pairs per carton
Origin: Made in the USA

82 Series Bookend Standard Pack	
Size	**White (WH)**
7"	182BE WH 7
9"	182BE WH 9
10.5"	182BE WH 10.5

182BE**

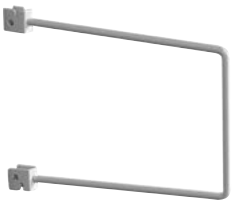

82DP SCREW ZC

Finish: Zinc (ZC)
Packed: 20 bags per carton (6 screws + 6 anchors per bag)

82DP SCREW ZC

182DP LCTR/JNR Shelf Locator Joiner

Finish: Clear plastic (CL)
Packed: 20 bags per carton (4 joiners + 8 screws per bag)

182DP LCTR/JNR

182DP LOCK Bracket Lock

Finish: Black rubber (BLK)
Packed: 20 bags per carton (6 locks per bag)

182DP LOCK

☐ Non-stock item – minimum order quantities and additional lead time may apply.

*Standards and brackets meet or exceed ANSI performance standards as established by BHMA testing requirements.

**

MADE IN USA

82™/182™ Series Heavy-Duty Standard and Bracket System

182 Series Bracket

Material: 16 gauge cold rolled steel
Finish: Black (BLK), Titanium (TI), White (WH)
Features: Holds up to 450 lbs. per pair of brackets*; european design asethetics; four complete locking teeth; countersunk screw holes to fasten shelves; full finish coverage to deter corrosion and provide optimum aesthetics

BLK RoHS

TI RoHS

WH RoHS

Pack Configurations

WOODWORK INSTITUTE

Standard		10 brackets per carton with UPC labels	
Builders Pack (BP)		10 brackets per carton, no UPC labels	
182 Series Brackets Standard Pack with UPC Labels			
Size	**Black (BLK)**	**Titanium (TI)**	**White (WH)**
5"	–	–	182 WH 5
7"	182 BLK 7	182 TI 7	182 WH 7
9"	182 BLK 9	182 TI 9	182 WH 9
10.5"	182 BLK 10.5	182 TI 10.5	182 WH 10.5
12.5"	182 BLK 12.5	182 TI 12.5	182 WH 12.5
14.5"	182 BLK 14.5	182 TI 14.5	182 WH 14.5
18.5"	182 BLK 18.5	182 TI 18.5	182 WH 18.5
24"	182 BLK 24	182 TI 24	182 WH 24
182 Series Brackets Builders Pack (BP)			
5"	182BP BLK 5	–	182BP WH 5
7"	182BP BLK 7	–	182BP WH 7
9"	182BP BLK 9	182BP TI 9	182BP WH 9
10.5"	182BP BLK 10.5	182BP TI 10.5	182BP WH 10.5
12.5"	182BP BLK 12.5	182BP TI 12.5	182BP WH 12.5
14.5"	182BP BLK 14.5	182BP TI 14.5	182BP WH 14.5
18.5"	182BP BLK 18.5	182BP TI 18.5	182BP WH 18.5
24"	182BP BLK 24	182BP TI 24	182BP WH 24

*Standards and brackets meet or exceed ANSI performance standards as established by BHMA testing requirements.

Download at www.kv.com > Resource Library

83™/183™ Series Heavy-Duty Standard and Bracket System

- Single slot design
- 1" vertical slot adjustability
- BHMA Grade 2 Compliant*
- Limited lifetime warranty

83 Series Oversized Standard

Dimensions: 3/4" wide x 1/2" deep x selected length
Material: 16 gauge cold rolled steel
Finish: Anochrome (ANO)

Origin: Made in the USA
Features: Safety lead-in at top of standard; embossed logo to show correct orientation; countersunk screw holes; center aligned slots and screw holes; precision cut lengths; full finish coverage to deter corrosion and provide optimum aesthetics

Pack Configuration

Standard	10 standards per carton, no UPC labels
83 Series Standards Standard Pack	
Size	**Anochrome (ANO)**
24"	83 ANO 24
36"	83 ANO 36
48"	83 ANO 48
60"	83 ANO 60
72"	83 ANO 72
84"	83 ANO 84
96"	83 ANO 96

Accessories

113L ANO** Left-Hand Anochrome (ANO) Panel Clip
113R ANO** Right-Hand Anochrome (ANO) Panel Clip

Finish: Anochrome (ANO)
Origin: Made in the USA
Packed: 50 per carton; Left and right clips packed separately
Application: Used to attach display and wall panels into vertical position

119 RUB Gray Rubber Cushion - Large Hole Retainer

Packed: 100 per carton
Packed: For use with 183 Series Brackets, use with glass, metal and wood shelves

134 ANO** Socket-#83 Standard Bottom Socket
135 ANO** Socket-#83 Standard Top Socket

134

135

Origin: Made in the USA
Packed: 100 per carton

159LL ANO** Lock Lever Heavy-Duty Support Bracket

Finish: Anochrome (ANO)
Origin: Made in the USA
Packed: 100 per carton
Benefit: Provides extra support for shelves with heavy loads; lever lock for extra secure mounting and stability

191 ANO** Hang Rod Saddle
192 ANO** Hang Rod Saddle

Finish: Anochrome (ANO)
Origin: Made in the USA
Packed: 10 per carton
Features: 191 bolts to 183L & 183R or 185 brackets to hold 1-1/16" O.D. tubing/closet rods
192 bolts to 183L & 183R or 185 brackets to hold 1-5/16" O.D. tubing/closet rods

**

*Standards and brackets meet or exceed ANSI performance standards as established by BHMA testing requirements.

83™/183™ Series Heavy-Duty Standard and Bracket System

183 Series Brackets

Part #: 183R: Right Flange Bracket
183L: Left Flange Bracket
183C: Center Flange Bracket

Material: 16 gauge cold rolled steel

Finish: Anochrome (ANO)

Origin: Made in the USA

Features: Holds up to 460 lbs. per pair of brackets*; bracket flanges allow for simple attachment to wooden shelves; brackets may also be used with 85 Series Standards for added support on long shelves; full finish coverage to deter corrosion and provide optimum aesthetic

183R RoHS

183L RoHS

183C RoHS

Pack Configuration

Standard	10 brackets per carton, no UPC labels		
183 Series Brackets Standard Pack - Anochrome (ANO) Finish			
Size	**Right**	**Left**	**Center**
8"	183R ANO 8	183L ANO 8	183C ANO 8
10"	183R ANO 10	183L ANO 10	183C ANO 10
12"	183R ANO 12	183L ANO 12	183C ANO 12
14"	183R ANO 14	183L ANO 14	183C ANO 14
16"	183R ANO 16	183L ANO 16	183C ANO 16
18"	183R ANO 18	183L ANO 18	183C ANO 18
20"	183R ANO 20	183L ANO 20	183C ANO 20

161LL Lock Lever Bracket

Material: 14 gauge cold rolled steel, nylon

Finish: Anochrome (ANO)

Origin: Made in the USA

Features: Three locking teeth; lever lock for extra secure mounting and stability; for use with 1" adjustable shelving; shelf retaining lip; full finish coverage to deter corrosion and provide optimum aesthetic

RoHS

Pack Configuration

Standard	10 brackets per carton, no UPC labels
161LL Brackets	
Size	**Anochrome**
14"	161LL ANO 14
16"	161LL ANO 16
18"	161LL ANO 18
20"	161LL ANO 20
24"	161LL ANO 24

*Standards and brackets meet or exceed ANSI performance standards as established by BHMA testing requirements.

Download at www.kv.com > Resource Library

85™/185™ Series Extra-Duty Standard and Bracket System

- Double slot design
- 1" vertical slot adjustability
- BHMA Grade 2 Compliant*
- Limited lifetime warranty

85 Series Standards

Dimensions: 1-1/4" wide x 1/2" deep x selected length
Material: 16 gauge cold rolled steel
Finish: Anochrome (ANO), White (WH)
Origin: Made in the USA
Features: Safety lead-in at top of standard; embossed logo to show correct orientation; countersunk screw holes; center aligned slots and screw holes; precision cut lengths

ANO RoHS

WH RoHS

Pack Configuration

WOODWORK INSTITUTE

MADE IN USA

Standard	10 standards per carton, no UPC labels	
85 Series Standards Standard Pack		
Size	**Anochrome (ANO)**	**White (WH)**
12"	85 ANO 12	85 WH 12
24"	85 ANO 24	85 WH 24
36"	85 ANO 36	85 WH 36
48"	85 ANO 48	85 WH 48
60"	85 ANO 60	85 WH 60
72"	85 ANO 72	85 WH 72
84"	85 ANO 84	85 WH 84
96"	85 ANO 96	85 WH 96

Accessories

106 ANO** Shelf Rest

Finish: Anochrome (ANO)
Packed: 100 per carton
Origin: Made in the USA
Application: Used to join two shelves at one bracket and/or fasten shelves to brackets

107 ANO** Hang Rod Clamp

Finish: Anochrome (ANO)
Packed: 20 per carton, with screw
Origin: Made in the USA
Application: Bolts to 183 and 185 Brackets to hold rods securely

113L ANO** Left-Hand Anochrome (ANO) Panel Clip
113R ANO** Right-Hand Anochrome (ANO) Panel Clip

Finish: Anochrome (ANO)
Packed: 50 per carton; Left and right clips packed separately
Origin: Made in the USA
Application: Used to attach display and wall panels into vertical position on standards

129 RUB: Gray Rubber Cushion - Small Hole Retainer

Packed: 100 per carton
Application: For use with 185 Series Brackets and 106 Series Shelf Rests; use with glass, metal and wood shelves

159LL ANO** Lock Lever Heavy-Duty Support Bracket

Finish: Anochrome (ANO)
Packed: 100 per carton
Origin: Made in the USA
Benefit: Provides extra support for shelves with heavy loads; lock lever for extra secure mounting and stability

191 ANO** 1-1/16" O.D. Hang Rod Saddle
192 ANO** 1-5/16" O.D. Hang Rod Saddle

Finish: Anochrome (ANO)
Packed: 10 per carton, with screw
Origin: Made in the USA
Features: 191 and 192 bolts to 183L, 183R and 185 Series Brackets

Non-stock item – minimum order quantities and additional lead time may apply.

**MADE IN USA

*Standards and brackets meet or exceed ANSI performance standards as established by BHMA testing requirements.

85™/185™ Series Extra-Duty Standard and Bracket System

185 Series Brackets

Material: 14 and 16 gauge cold rolled steel
Finish: Anochrome (ANO), White (WH)
Origin: Made in the USA
Features: Holds up to 680 lbs. per pair of brackets*; shelf retaining lip on brackets; four locking teeth and two lugs for safety and stability; shelf fastening screw holes; full finish coverage to deter corrosion and provide optimum aesthetics

Pack Configuration

Standard	10 brackets per carton, no UPC labels	
185 Series Brackets Standard Pack		
Size	**Anochrome (ANO)**	**White (WH)**
8"	185 ANO 8	185 WH 8
10"	185 ANO 10	185 WH 10
12"	185 ANO 12	185 WH 12
14"	185 ANO 14	185 WH 14
16"	185 ANO 16	185 WH 16
18"	185 ANO 18	185 WH 18
20"	185 ANO 20	185 WH 20
22"	185 ANO 22	185 WH 22
24"	185 ANO 24	185 WH 24

NOTE: 180 Anochrome (ANO) brackets and all other KV 1" adjustable brackets can be used with 85 Series double-slotted standards.

ANO RoHS

WH RoHS

*Standards and brackets meet or exceed ANSI performance standards as established by BHMA testing requirements.

87 ™/186™/187 ™ Series Super-Duty Standard and Bracket System

- Single slot design
- 2" vertical slot adjustability
- Limited lifetime warranty
- BHMA Grade 2 Compliant*

87 Series Standard

Dimensions: 7/8" wide x 11/16" deep x selected height
Material: 12 gauge cold rolled steel
Finish: Anochrome (ANO), White (WH)
Origin: Made in the USA
Features: Countersunk screw holes; embossed logo to show correct orientation; center aligned slots and screw holes; precision cut lengths; full finish coverage to deter corrosion and provide optimum aesthetics

Pack Configuration

WOODWORK INSTITUTE

MADE IN USA

Standard	5 per carton, no UPC labels	
87 Series Standards Standard Pack		
Size	**Anochrome (ANO)**	**White (WH)**
12"	87 ANO 12	87 WH 12
24"	87 ANO 24	87 WH 24
36"	87 ANO 36	87 WH 36
48"	87 ANO 48	87 WH 48
60"	87 ANO 60	87 WH 60
72"	87 ANO 72	87 WH 72
84"	87 ANO 84	87 WH 84
96"	87 ANO 96	87 WH 96

ANO RoHS

WH RoHS

1987 Series Galvanized Steel Shelving

Material: Galvanized steel
Finish: Galvanized Steel (GALV)
Origin: Made in the USA
Features: Predrilled mounting holes to fasten to brackets, back lip to protect walls

Pack Configuration

MADE IN USA

Standard	5 per carton; except 20" x 32": 3 per carton
1987 Series Shelving Standard Pack	
Size	**Galvanized (GALV)**
8" x 32"	1987 GALV 8X32
10" x 32"	1987 GALV 10X32
12" x 32"	1987 GALV 12X32
14" x 32"	1987 GALV 14X32
16" x 32"	1987 GALV 16X32
20" x 32"	1987 GALV 20X32

Non-stock item – minimum order quantities and additional lead time may apply.

*Standards and brackets meet or exceed ANSI performance standards as established by BHMA testing requirements.

87™/186™/187™ Series Super-Duty Standard and Bracket System

186LL and 187LL Series Lock Lever Brackets

Material: 12 gauge cold rolled steel
Finish: Anochrome (ANO), White (WH)
Origin: Made in the USA
Features: Holds up to 1,060 lbs. per pair of brackets*; utilizes an easy-to-install unique cam lock that secures brackets to the standard; two or three complete locking teeth; predrilled holes for mounting 1987 Series shelves or attaching shelf rests; full finish coverage to deter corrosion and provide optimum aesthetics

186LL ANO RoHS

187LL ANO RoHS

186LL WH RoHS

187LL WH RoHS

NOTE: Steel brackets do not work with 87 Series Stainless Steel Standards. Must be used with Steel Standards.

Pack Configuration

WOODWORK INSTITUTE

MADE IN USA

Standard	10 per carton, no UPC labels	
186 Series Brackets Standard Pack		
Size	**Anochrome (ANO)**	**White (WH)**
8"	186LL ANO 8	186LL WH 8
10"	186LL ANO 10	186LL WH 10
187 Series Brackets Standard Pack		
12"	187LL ANO 12	187LL WH 12
14"	187LL ANO 14	187LL WH 14
16"	187LL ANO 16	187LL WH 16
18"	187LL ANO 18	187LL WH 18
20"	187LL ANO 20	187LL WH 20
22"	187LL ANO 22	187LL WH 22
24"	187LL ANO 24	187LL WH 24

Accessories

87-10 WH 100: 87 Series Standard Mounting Screws

Sizes: #10 x 2-3/4" screw
Finish: White (WH)
Packed: 100 per bag

119 RUB: Gray Rubber Cushion - Large Hole Retainer

Packed: 100 per carton
Application: Recommended for use when supporting glass shelves, for use with 210, 211 and 212 Series Shelf Rests; use with glass, metal or wood shelves

129 RUB: Gray Rubber Cushion - Small Hole Retainer

Packed: 100 per carton
Application: Recommended for use when supporting glass shelves, for use with 210, 211, 212 and 213C Series Shelf Rests; use with glass, metal or wood shelves

210 ANO** Anochrome (ANO) End Rest with bracket screw
210 WH** White (WH) End Rest with bracket screw
211 ANO** Anochrome (ANO) Center Rest with bracket screw
211 WH** White (WH) Center Rest with bracket screw
212 ANO** Anochrome (ANO) Front Rest with bracket screw
212 WH** White (WH) Front Rest with bracket screw
213C ZC: Zinc (ZC) Snap-In Center Rest

Finish: Anochrome (ANO), White (WH), Zinc (ZC)
Packed: 100 per carton
Application: For use with 186 and 187 Series Brackets for anchoring shelves to brackets

210**

211**

212**

213

**

MADE IN USA

*Standards and brackets meet or exceed ANSI performance standards as established by BHMA testing requirements.

87 ™/186 ™/187 ™ Super-Duty Stainless Steel Standard and Bracket System

- Single slot design
- 2" vertical slot adjustability
- Limited lifetime warranty
- BHMA Grade 2 Compliant*

87 SS Series Standard

Dimensions: 7/8" wide x 11/16" deep

Material: 14 gauge, 304 grade stainless steel

Finish: Stainless Steel (SS)

Origin: Made in the USA

Features: Countersunk screw holes; center aligned slots and screw holes; precision cut lengths

Pack Configuration

Standard	5 per carton, no UPC labels
87 Series Standards Standard Pack	
Size	**Stainless Steel (SS)**
12"	87 SS 12
24"	87 SS 24
36"	87 SS 36
48"	87 SS 48
60"	87 SS 60
72"	87 SS 72

1987 Series Stainless Steel Shelving

Material: 14 gauge, 304 grade stainless steel

Finish: Stainless Steel (SS) with brushed finish

Origin: Made in the USA

Features: Predrilled mounting holes to fasten to brackets; back lip to protect walls; shelves are shipped with protective vinyl wrap

Pack Configuration

Standard	5 per carton; except 20" x 32": 3 per carton
1987 Series Stainless Steel Shelving Standard Pack	
Size	**Stainless Steel (SS)**
8" x 32"	1987 SS 8X32
10" x 32"	1987 SS 10X32
12" x 32"	1987 SS 12X32
14" x 32"	1987 SS 14X32
16" x 32"	1987 SS 16X32
20" x 32"	1987 SS 20X32

Non-stock item – minimum order quantities and additional lead time may apply.

*Standards and brackets meet or exceed ANSI performance standards as established by BHMA testing requirements.

87™/186™/187™ Super-Duty Stainless Steel Standard and Bracket System

186LL and 187LL Series Stainless Steel Lock Lever Brackets

Material: 14 gauge 304 grade stainless steel
Finish: Brushed Stainless Steel (SS)
Origin: Made in the USA
Features: Holds up to 560 lbs. per pair of brackets*; lever lock for easy installation, stability and safety; predrilled holes for mounting 1987 Series shelves or attaching shelf rests; two or three complete locking teeth

Pack Configuration

Standard	10 per carton, no UPC labels
186 Series Brackets Standard Pack	
Size	**Stainless Steel (SS)**
8"	186LL SS 8
10"	186LL SS 10
187 Series Brackets Standard Pack	
12"	187LL SS 12
14"	187LL SS 14
16"	187LL SS 16
18"	187LL SS 18
20"	187LL SS 20
24"	187LL SS 24

NOTE: Stainless Steel brackets do not work with 87 steel standards. Must be used with Stainless Steel Standards

186LL SS

187LL SS

Non-stock item – minimum order quantities and additional lead time may apply.

*Standards and brackets meet or exceed ANSI performance standards as established by BHMA testing requirements.

5mm Shelf Supports for Built-In Shelving

326 ANO and 326 BR Grommets

Grommet Diameter: For 7/32" (5.556mm) holes
Pin Diameter: Designed for 5mm pin diameters
Finish: Anochrome (ANO), Brass-look (BR)
Packed: 1000 per bag, 4 bags per carton

330 ANO Shelf Supports

Pin Diameter: Designed for 5mm holes
Finish: Anochrome (ANO)
Packed: 2000 per bag, 4 bags per carton

332 ANO and 332 BR Shelf Supports

Pin Diameter: Designed for 5mm holes
Pin Length: 5/16" (8mm)
Shelf Rest: 5/16" (8mm) wide x 7/16" (11mm) long
Finish: Anochrome (ANO), Brass-look (BR)
Packed: 1000 per bag, 4 bags per carton

338 Series Plastic Shelf Support Pins

Pin Diameter: Designed for 5mm holes
Pin Length: 5/16" (8mm)
Shelf Rest: 7/16" (11mm) wide x 13/32" (10mm) long
Finish: Clear Plastic (CL), White (WH)

Pack Configurations

Standard	100 pieces per carton	
Poly (P)	12 supports per bag; 10 bags per carton	
338 Series Shelf Support		
Pack Configuration	**Clear Plastic (CL)**	**White (WH)**
Standard Pack	338 CL	338 WH
Poly (P) Pack	338P CL	–

339 WH Plastic Locking Shelf Support for 3/4" Shelves

Pin Diameter: Designed for 5mm holes
Pin Length: 1/4"
Finish: White (WH)
Packed: 100 per bag, 25 bags per carton

340 WH Plastic Locking Shelf Supports for 1" Shelves

Pin Diameter: Designed for 5mm holes
Pin Length: 1/4"
Finish: White (WH)
Packed: 100 per bag, 5 bags per carton

345 Series Metal Shelf Pins

Pin Diameter: Designed for 5mm holes
Pin Length: 5/16" (8mm)
Shelf Rest: 1/2" (13mm) wide x 11/16" (17mm) long
Finish: Nickel Plated (NP), Brass-Look (BR), Walnut (WAL)

WOODWORK INSTITUTE

Pack Configurations

Standard	100 pieces per carton		
Poly (P)	12 supports per bag; 10 bags per carton		
Barrel (BBL)	9,000 pieces per barrel		
345 Series Shelf Support			
Pack Configuration	**Nickel Plated (NP)**	**Brass-Look (BR)**	**Walnut (WAL)**
Standard Pack	345 NP	345 BR	345 WAL
Poly (P) Pack	345P NP	–	–
Barrel (BBL) Pack	345BBL NP	–	–

348 ALM, 348 BRN and 348 WH Vinyl Coated Shelf Supports

Pin Diameter: Designed for 5mm holes; use 13/64" diameter drill bit
Pin Length: 5/16" (8mm)
Shelf Rest: 1/2" (13mm) wide x 11/16" (17mm) long
Finish: Almond (ALM), Brown (BRN), White (WH)
Packed: 1000 pieces per carton

1/4" and 7/32" Shelf Supports and Grommets

325 ANO and 325 BR Grommets

Grommet Diameter: For 9/32" (7.143mm) holes
Pin Diameter: Designed for 1/4" pin diameters
Finish: Anochrome (ANO), Brass-look (BR)
Packed: 1000 per bag, 4 bags per carton

331 ANO and 331 BR Shelf Supports

Pin Diameter: Designed for 1/4" holes
Pin Length: 3/8" (9mm)
Shelf Rests: 3/8" (9mm) wide x 1/2" (13mm) long
Finish: Anochrome (ANO), Brass-look (BR)
Packed: 1000 per bag, 4 bags per carton

335 Series Plastic Shelf Support Pins

Pin Diameter: Designed for 1/4" holes
Pin Length: 7/16" (11mm)
Shelf Rest: 1/2" (13mm) wide x 17/32" (14mm) long
Finish: Clear Plastic (CL), Plastic (PLAS), White (WH)

Pack Configurations

Standard Pack	10 pieces per carton		
Poly (P) Pack	12 supports per bag; 10 bags per carton		
335 Series Shelf Support			
Pack Configuration	**Clear Plastic (CL)**	**Plastic (PLAS)**	**White (WH)**
Standard Pack	335 CL	335 PLAS	335 WH
Poly (P) Pack	335P CL	335P PLAS	335P WH

346 Series Metal Shelf Pins

Pin Diameter: Designed for 1/4" holes
Pin Length: 3/8" (9mm)
Shelf Rest: 1/2" (13mm) wide x 11/16" (17mm) long
Finish: Anochrome (ANO), Brass-Look (BR), Walnut (WAL)

WOODWORK INSTITUTE

Pack Configurations

Standard Pack	100 pieces per carton		
Poly (P) Pack	12 supports per bag; 10 bags per carton		
Barrel (BBL) Pack	9,000 pieces per barrel		
346 Series Shelf Support			
Pack Configuration	**Anochrome (ANO)**	**Brass-Look (BR)**	**Walnut (WAL)**
Standard Pack	346 ANO	346 BR	346 WAL
Poly (P) Pack	346P ANO	346P BR	346P WAL
Barrel (BBL)	346BBL ANO	–	–

333 ZC Shelf Supports

Pin Diameter: Designed for 7/32" holes; use 15/64" diameter drill
Pin Length: 1/2" (13mm)
Shelf Rest: 9/16" (14mm) wide x 7/16" (11mm) long
Finish: Zinc (ZC)
Packed: 1000 per carton

Non-stock item – minimum order quantities and additional lead time may apply.

Download at www.kv.com > Resource Library

Utility Shelving Brackets

206 Series Extra-Duty Folding L-Bracket

Finish: Zinc (ZC), White (WH)

Features: Holds up to 750 lbs. per pair*; 4 adjustable positions: 90º, 80º, 70º, and 0º (closed position)**; all steel construction with spring-loaded release lever; predrilled screw holes in top of bracket for easy fastening to wood shelves; BHMA Grade 2 Compliant*

206 ZC RoHS

206 WH RoHS

Pack Configuration

Standard	10 per display carton with UPC labels attached	
206 Series Folding L-Brackets		
Size	**Zinc (ZC)**	**White (WH)**
12"	206 ZC 12	206 WH 12
16"	206 ZC 16	206 WH 16

NOTE: Angle has a tolerance of +1°. May need to shim for level installations.

208 Series Super-Duty Ultimate L-Bracket™

Finish: Black (BLK), Titanium (TI), White (WH)

Features: Holds up to 1,200 lbs. per pair*; super-duty bracket; corrosion resistant powder coat finish; 5mm steel back strap and 3/4" steel strut; BHMA Grade 2 Compliant*

208 BLK RoHS

208 TI RoHS

208 WH RoHS

Pack Configuration

Standard	10 per display carton with UPC labels		
208 Series Bracket			
Size	**Black (BLK)**	**Titanium (TI)**	**White (WH)**
300mm (12")	208 BLK 300	208 TI 300	208 WH 300
400mm (16")	208 BLK 400	208 TI 400	208 WH 400
500mm (20")	208 BLK 500	208 TI 500	208 WH 500
550mm (22")	208 BLk 550	208 TI 550	208 WH 550

221 Series Utility L-Bracket

Finish: Gray (GRY), White (WH)

Features: Holds up to 120 lbs. per pair*; regular-duty bracket; durable powder coat finish, reversible installation

221 WH RoHS

221 GRY RoHS

Pack Configuration

Standard	20 per carton with UPC labels	
221 Series Bracket		
Size	**Gray (GRY)**	**White (WH)**
5" x 6"	221 GRY 5X6	221 WH 5X6
6" x 8"	221 GRY 6X8	221 WH 6X8
8" x 10"	221 GRY 8X10	221 WH 8X10
10" x 12"	221 GRY 10X12	221 WH 10X12
12" x 14"	221 GRY 12X14	221 WH 12X14

*Standards and brackets meet or exceed ANSI performance standards as established by BHMA testing requirements.

Decorative Shelf Brackets

0117 & 0118 Floating Shelf Brackets

Finish: White (WH)

Features: Low profile to hide bracket visuals

Application: 0117: use with 5/8" thick shelves
0118: use with 3/4" thick shelves

Pack Configuration

Standard	5 per display carton with UPC labels, individually shrink wrapped
0117 Floating Shelf Bracket	
Size	**White (WT)**
24"	0117-24WT
36"	0117-36WT
48"	0117-48WT
0118 Floating Shelf Bracket	
24"	0118-24WT

0117

0118

215 Series Slim-Line™ Shelf Bracket

Finish: Black (BLK), White (WH)

Features: BHMA Grade 2 Compliant*; accented with decorative plastic trim that hides mounting hardware

Pack Configuration

Special Pack	10 per display carton with UPC labels	
215 Series Bracket Special Pack (SP)		
8"	215SP BLK 8	215SP WH 8
10"	215SP BLK 10	215SP WH 10
12"	215SP BLK 12	215SP WH 12

BLK

WH

0035 & 0036 Designer Shelf Bracket

Finish: Black (BLK), White (WH)

Features: BHMA Grade 2 Compliant*; heavy-duty steel; accented with decorative plastic trim that hides mounting hardware. Metal brackets with color covers

Pack Configurations

Standard	10 per display carton with UPC labels	
0035 & 0036 Designer Shelf Bracket		
Size	**Black (BLK)**	**White (WT)**
6"	BK-0035-BK	BK-0035-WT
8"	–	BK-0036-WT

BLK

WH

217 Series Silhouette™ Shelf Bracket

Finish: Black (BLK), White (WH)

Features: BHMA Grade 2 Compliant*; heavy-duty steel; center rib for superior strength; countersunk screw holes

Pack Configuration

Special Pack	10 per carton (all sizes)	
217 Series Bracket Special Pack (SP)		
8"	217SP BLK 8	217SP WH 8
10"	217SP BLK 10	217SP WH 10
12"	217SP BLK 12	217SP WH 12

BLK

WH

*Standards and brackets meet or exceed ANSI performance standards as established by BHMA testing requirements.

Download at www.kv.com > Resource Library

201 Series SHELF-MADE® Exclusive™ Premium Decorative Shelf Brackets

Richland 201RC Series Decorative Brackets

Finish: Black (BK), Bronze (BRZ)

Features: Holds up to 500 lbs. per pair*; BHMA Grade 1 Compliant*; distinct styles fit any decor; screw holes for easy mounting; 8" size for 8"–12" deep shelves; 12" size for 12"–16" deep shelves, color match screws included, durable powder coat finish

BK

BRZ

Pack Configuration

Standard	8 brackets with screws	
201RC Series Richland Decorative Shelf Bracket		
Size	**Black (BK)**	**Bronze (BRZ)**
8"	RP-201RC-8BK	RP-201RC-8BRZ
12"	RP-201RC-12BK	RP-201RC-12BRZ

Manhattan 201MN Series Decorative Brackets

Finish: Black (BK), Bronze (BRZ), Satin Nickel (SN)

Features: Holds up to 500 lbs. per pair*; BHMA Grade 1 Compliant*; distinct styles fit any decor; screw holes for easy mounting; 8" size for 8"–12" deep shelves; 12" size for 12"–16" deep shelves, color match screws included, durable powder coat finish, reversible installation capable

BK

BRZ

SN

Pack Configuration

Standard	8 brackets with screws		
201MN Series Manhattan Decorative Shelf Bracket			
Size	**Black (BK)**	**Bronze (BRZ)**	**Satin Nickel (SN)**
8"	RP-201MN-8BK	RP-201MN-8BRZ	RP-201MN-8BSN
12"	RP-201MN-12BK	RP-201MN-12BRZ	RP-201MN-12SN

Heartland 201HR Series Decorative Brackets

Finish: Anthracite (ANT), Black (BK), Bronze (BRZ)

Features: Holds up to 50 lbs. per pair*; BHMA Grade 1 Compliant*; distinct styles fit any decor; screw holes for easy mounting; 6" x 8" size for 6"–12" deep shelves; 8" x 10" size for 8"–14" deep shelves, color match screws included, durable powder coat finish, reversible installation capable

BK

BRZ

ANT

Pack Configuration

Standard	8 brackets with screws		
201HR Series Heartland Decorative Shelf Bracket			
Size	**Black (BK)**	**Bronze (BRZ)**	**Anthracite (ANT)**
6" x 8"	RP-201HR-68BK	RP-201HR-68BRZ	RP-201HR-68BANT
8" x 10"	RP-201HR-810BK	RP-201HR-810BRZ	RP-201HR-810ANT

*Standards and brackets meet or exceed ANSI performance standards as established by BHMA testing requirements.

201 Series SHELF-MADE® Exclusive™ Premium Decorative Shelf Brackets

Silverston 201SL Series Decorative Brackets

Finish: Black (BK)

Features: Holds up to 75 lbs. per pair*; BHMA Grade 1 Compliant*; distinct styles fit any decor; screw holes for easy mounting; 10" size for 9.75" deep shelves; 12" size for 11.75" deep shelves, color match screws included, durable powder coat finish, shelf retaining lip

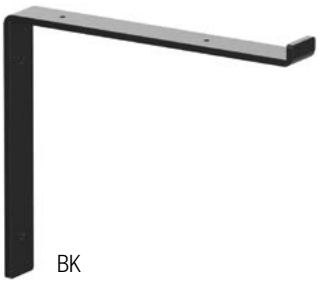

Pack Configuration

Standard	8 brackets with screws
201SL Series Manhattan Decorative Shelf Bracket	
Size	**Black (BK)**
10"	RP-201SL-10BK
12"	RP-201SL-12BK

Lewiston 201LW Series Decorative Brackets

Finish: Black (BK), Satin Gold (SG), Satin Nickel (SN)

Features: Holds up to 100 lbs. per pair*; BHMA Grade 1 Compliant*; distinct styles fit any decor; screw holes for easy mounting; 8" size for 8"–12" deep shelves; 12" size for 12"–16" deep shelves, color match screws included, durable powder coat finish

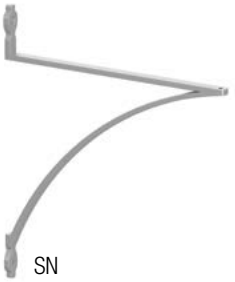

Pack Configuration

Standard	8 brackets with screws		
201LW Series Lewiston Decorative Shelf Bracket			
Size	**Black (BK)**	**Satin Gold (SG)**	**Satin Nickel (SN)**
8"	RP-201LW-8BK	RP-201LW-8SG	RP-201LW-8SN
12"	RP-201LW-12BK	RP-201LW-12SG	RP-201LW-12SN

Pittsburgh 201PT Series Decorative Brackets

Finish: Black (BK), Bronze (BRZ), Satin Nickel (SN)

Features: Holds up to 200 lbs. per pair*; BHMA Grade 1 Compliant*; distinct styles fit any decor; screw holes for easy mounting; 8" size for 0.625" thick x 7.95" deep shelves; 12" size for 0.625" thick by 11.95" deep shelves; sold in pairs, color match screws included, durable powder coat finish

Pack Configuration

Standard	10 pairs of brackets with screws		
201MN Series Pittsburgh Decorative Shelf Bracket			
Size	**Black (BK)**	**Bronze (BRZ)**	**Satin Nickel (SN)**
8"	RP-201PT-8BK	RP-201PT-8BRZ	RP-201PT-8SN
12"	RP-201PT-12BK	RP-201PT-12BRZ	RP-201PT-12SN

*Standards and brackets meet or exceed ANSI performance standards as established by BHMA testing requirements.

Download at www.kv.com > Resource Library

200 Series Designer Decorative Shelf Brackets

Concord 200C Series Decorative Brackets

Finish: Antique Bronze (AB), Black (BLK), Satin Nickel (SN), White (WH)

Features: Holds up to 50 lbs. per pair*; BHMA Grade 1 Compliant*; distinct traditional styles fit any decor; screw holes for easy mounting; 6" size for 6"–8" deep shelves; 8" size for 8"–12" shelves; durable powder coat finish

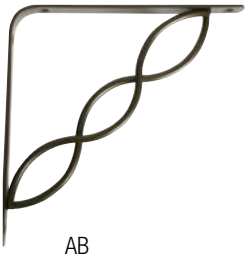
AB

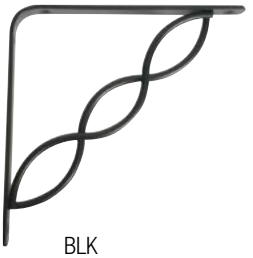
BLK

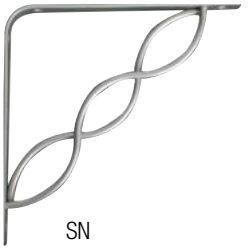
SN

WH

Pack Configuration

Standard	10 carded pieces per carton			
200C Series Concord Decorative Shelf Bracket				
Size	**Antique Bronze (AB)**	**Black (BLK)**	**Satin Nickel (SN)**	**White (WH)**
6"	200C AB 6	200C BLK 6	200C SN 6	200C WH 6
8"	200C AB 8	200C BLK 8	200C SN 8	200C WH 8

Manchester 200M Series Decorative Brackets

Finish: Antique Bronze (AB), Black (BLK), Satin Nickel (SN), White (WH)

Features: Holds up to 50 lbs. per pair*; BHMA Grade 1 Compliant*; distinct traditional styles fit any decor; screw holes for easy mounting; 6" size for 6"–8" deep shelves; 8" size for 8"–12" shelves; durable powder coat finish

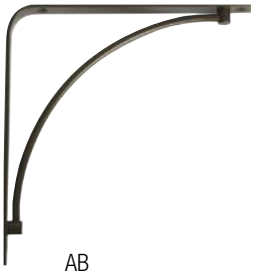
AB

BLK

SN

WH

Pack Configuration

Standard	10 carded pieces per carton			
200M Series Manchester Decorative Shelf Bracket				
Size	**Antique Bronze (AB)**	**Black (BLK)**	**Satin Nickel (SN)**	**White (WH)**
6"	200M AB 6	200M BLK 6	200M SN 6	200M WH 6
8"	200M AB 8	200M BLK 8	200M SN 8	200M WH 8

Oak Park 2000P Series Decorative Brackets

Finish: Antique Bronze (AB), Black (BLK), Satin Nickel (SN)

Features: Holds up to 100 lbs. per pair*; BHMA Grade 1 Compliant*; distinct contemporary styles fit any decor; screw holes for easy mounting; 8" size for 8"–12" shelves; cast zinc insets; durable powder coat finish

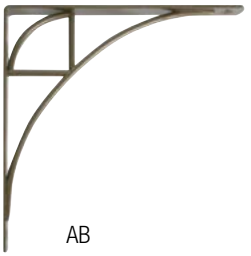
AB

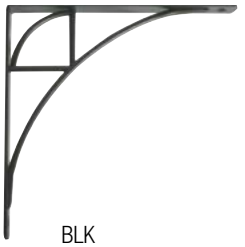
BLK

SN

Pack Configuration

Standard	10 carded pieces per carton		
2000P Series Oak Park Decorative Shelf Bracket			
Size	**Antique Bronze (AB)**	**Black (BLK)**	**Satin Nickel (SN)**
8"	2000P AB 8	2000P BLK 8	2000P SN 8

*Standards and brackets meet or exceed ANSI performance standards as established by BHMA testing requirements.

200 Series Designer Decorative Shelf Brackets

Stockton 200S Series Decorative Brackets

Finish: Black (BLK), Satin Nickel (SN)

Features: Holds up to 100 lbs. per pair*; BHMA Grade 1 Compliant*; distinct contemporary styles fit any decor; screw holes for easy mounting; 8" size for 8"–12" shelves; cast zinc insets; durable powder coat finish

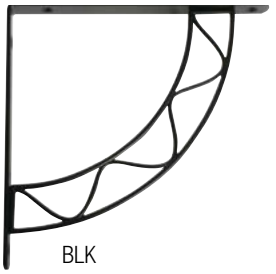
BLK

SN

Pack Configuration

Standard	10 carded pieces per carton	
200S Series Stockton Decorative Shelf Bracket		
Size	**Black (BLK)**	**Satin Nickel (SN)**
8"	200S BLK 8	200S SN 8

Baton Rouge 200BR Series Decorative Brackets

Finish: Antique Bronze (AB), Black (BLK), Satin Nickel (SN)

Features: Holds up to 200 lbs. per pair*; BHMA Grade 2 Compliant*; distinct elegant styles fit any decor; screw holes for easy mounting; 8" size for 8"–12" shelves; cast zinc insets; durable powder coat finish

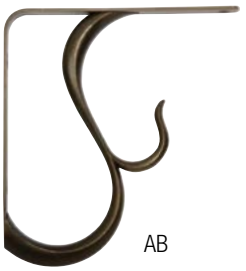
AB

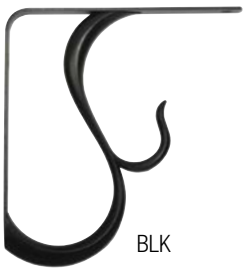
BLK

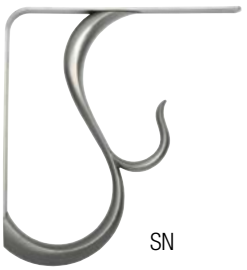
SN

Pack Configuration

Standard	10 carded pieces per carton		
200BR Series Baton Rouge Decorative Shelf Bracket			
Size	**Antique Bronze (AB)**	**Black (BLK)**	**Satin Nickel (SN)**
8"	200BR AB 8	200BR BLK 8	200BR SN 8

Charleston 200CH Series Decorative Brackets

Finish: Black (BLK), Satin Nickel (SN)

Features: Holds up to 200 lbs. per pair*; BHMA Grade 2 Compliant*; distinct elegant styles fit any decor; screw holes for easy mounting; 8" size for 8"–12" shelves; cast zinc insets; durable powder coat finish

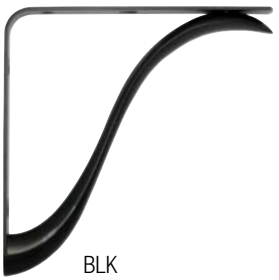
BLK

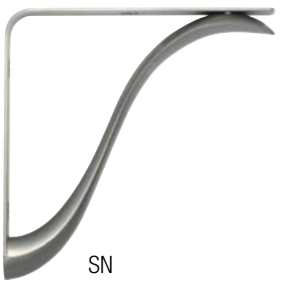
SN

Pack Configuration

Standard	10 carded pieces per carton	
200CH Series Charleston Decorative Shelf Bracket		
Size	**Black (BLK)**	**Satin Nickel (SN)**
8"	200CH BLK 8	200CH SN 8

*Standards and brackets meet or exceed ANSI performance standards as established by BHMA testing requirements.

Download at www.kv.com > Resource Library

Shelf Board

1980 Series All-Purpose Shelf Board

Finish: Diamond Ash (DA), Espresso (ESP), Oak (OK), Walnut (W), White (WH)

Origin: Made in China

Features: Holds up to 200 lbs. when properly installed; 5/8" thick with square corners; scratch and stain resistant for long life; easy to clean surface

ESP

Pack Configuration

Standard	5 per carton, with the exception: 12" x 72" packed 3 per carton				
1980 Series Shelving Standard Pack					
Size	**Diamond Ash (DA)**	**Espresso (ESP)**	**Oak (OK)**	**Walnut (W)**	**White (WH)**
8" x 24"	1980 DA 8X24	1980 ESP 8X24	1980 OK 8X24	1980 W 8X24	1980 WH 8X24
8" x 36"	1980 DA 8X36	1980 ESP 8X36	1980 OK 8X36	1980 W 8X36	1980 WH 8X36
8" x 48"	1980 DA 8X48	1980 ESP 8X48	1980 OK 8X48	1980 W 8X48	1980 WH 8X48
10" x 24"	1980 DA 10X24	1980 ESP 10X24	1980 OK 10X24	1980 W 10X24	1980 WH 10X24
10" x 36"	1980 DA 10X36	1980 ESP 10X36	1980 OK 10X36	1980 W 10X36	1980 WH 10X36
10" x 48"	1980 DA 10X48	1980 ESP 10X48	1980 OK 10X48	1980 W 10X48	1980 WH 10X48
12" x 24"	1980 DA 12X24	1980 ESP 12X24	1980 OK 12X24	1980 W 12X24	1980 WH 12X24
12" x 36"	1980 DA 12X36	1980 ESP 12X36	1980 OK 12X36	1980 W 12X36	1980 WH 12X36
12" x 48"	1980 DA 12X48	1980 ESP 12X48	1980 OK 12X48	1980 W 12X48	1980 WH 12X48
12" x 72"	–	–	–	–	1980 WH 12X72

Specialty Hardware

Magnetic and Bullet Catches 117
Sliding Door Pulls. 117
Mirror Clips/Glass Clips, Fittings and Latches 118
Index Followers, Label Holders, Locks and Pulls 119
Fasteners and Hinges 120
Plastic Door Track Assemblies for Sliding Doors. 121
Locks and Door Rollers 122
Sheaves 123
Steel Tracks and Guides for Sliding Doors 124
Roll-Ezy Ball-Bearing Sliding Glass Door System 125
Roll-Ezy Aluminum Sliding Glass Door System 126
KV Powered by Samet: Sliding Door 128
KV Powered by Samet: Fittings 128

Magnetic and Bullet Catches

Magnetic Catches

918 ALUM Heavy-Duty Aluminum Magnetic Catch

Size: 2-1/16" width x 1" depth x 3/4" tall
Finish: Aluminum (ALUM)
Origin: Made in the USA
Packed: 10 per carton, packed in a clear envelope with screws
Pull Strength: 7 lbs.

Bullet Catches

903 BR DIP Adjustable Brass Catch

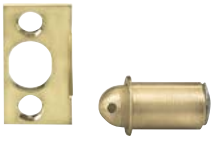

Size: 3/8" diameter; 5/8" long; 9/16" x 1-1/16" diameter strike
Finish: Brass-look (BR)
Packed: 100 per carton

905 BR DIP Adjustable Brass-look Catch

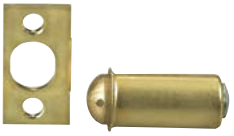

Size: 1/2" diameter; 1-1/32" long; 5/8" x 1-1/4" diameter strike
Finish: Brass-look (BR)
Packed: 50 per carton with screws

Sliding Door Pulls

Knobs and Finger Pulls

813 ANO Oval Flush Finger Pull*

Size: Over-flange 3/16" x 2-7/8"
Bore 51/64" x 2-1/2" x 25/64" deep
Finish: Anochrome (ANO)
Origin: Made in the USA
Packed: 100 per carton

1088 ANOD Knob Pull

Finish: Zinc plated steel (ANOD)
Origin: Made in the USA
Packed: Sets of: 2 knobs, screws, and rubber bumpers per envelope
50 sets per carton
Features: Mounts to 1095 shoe (1092 assembly)

Finger Pulls

801X NP and 803X NP Flush Finger Pull

Size: 801X: 31/32" outside diameter,
Bore 25/36" hole diameter, 1/4" depth
803X: 31/32" outside diameter,
Bore 25/36" hole diameter, 3/8" depth
Finish: Nickel Plate (NP)
Origin: Made in the USA
Packed: 100 per carton

836 ANO Threaded Finger Pull

Size: 1-1/16" outside diameter, cut a 13/16" diameter hole for installation
Finish: Anochrome (ANO)
Origin: Made in the USA
Packed: 50 per carton
Features: Two-piece screw-together pull for glass 3/16" to 5/16" thick; with beveled edges

WOODWORK INSTITUTE

* WoodWork Institute Acknowledged Products

Mirror Clips/Glass Clips, Fittings and Latches

Mirror Clips/Glass Clips

6092 PLAS Plastic Mirror Clips

Size: For 1/4" thick glass/mirror
Finish: Clear Plastic (PLAS)
Packed: 100 per carton with screws

6094 PLAS Plastic Mirror Clip

Size: For 1/8" thick glass/mirror
Finish: Clear Plastic (PLAS)
Packed: 100 per carton with screws

266 CHR Cast Mirror Clip

Size: 1-1/16" long x 3/4" wide; for 1/4" thick glass/mirror
Finish: Chrome (CHR)
Packed: 12 per carton with screws

268 CHR Heavy-Duty Cast Mirror Clip

Size: 1-1/4" long x 11/16" wide; for 1/4" thick glass/mirror
Finish: Chrome (CHR)
Packed: 12 per carton with screws

277 ANO** Bottom-Mount Mirror Clip

Size: 1-1/2" wide x 1" high; for 1/4" thick glass/mirror
Material: Brass
Finish: Anochrome (ANO)
Origin: Made in the USA
Packed: 10 per carton
Features: Screw attached bottom flange for snug mounting; made of brass for corrosion resistance in high humidity

278 ANO** Top-Mount Mirror Clip

Size: 1-1/2" wide x 1-1/8" high; for 1/4" thick glass/mirror
Material: Brass
Finish: Anochrome (ANO)
Origin: Made in the USA
Packed: 10 per carton
Features: Screw attached upper flange for snug mounting; made of brass for corrosion resistance in high humidity

288 ANO** Mirror Clip

Size: 1/2" wide, for 1/4" thick glass/mirror
Material: Brass
Finish: Anochrome (ANO)
Origin: Made in the USA
Packed: 100 per carton
Features: Made of brass for corrosion resistance in high humidity

309 ANO** Steel Mirror Clip

Size: 9/16" wide x 1-1/4" long; for 5/16" thick glass/mirror
Material: Brass
Finish: Anochrome (ANO)
Origin: Made in the USA
Packed: 100 per carton
Features: Countersunk for #4 screws; made of brass for corrosion resistance in high humidity

318 ANO** Steel Mirror Clip

Size: 9/16" wide x 1-1/4" long; for 5/16" thick glass/mirror
Material: Brass
Finish: Anochrome (ANO)
Origin: Made in the USA
Packed: 100 per carton
Features: Countersunk elongated slot for #5 flat head screws; elongated mounting hole for adjustable installation; made of brass for corrosion resistance in high humidity

Fittings

306 ANO** Glass Fitting

Size: 9/16" wide x 1-1/4" long
Material: Brass
Finish: Anochrome (ANO)
Packed: 100 per carton
Origin: Made in the USA
Features: Countersunk for #4 screws; made of brass for corrosion resistance in high humidity

Latches

989 Series Secret Gate Latch

Size: 2" x 2-3/8"
Finish: Aluminum
Packed: 12 per carton
Features: Interchangeable left or right hand mounting

989 Series Secret Gate Latch	
Product	**Finish**
989 ALUM	Aluminum

**

MADE IN USA

Index Followers, Label Holders, Locks and Pulls

Index Followers & Track

475F ZC Card Sized Index Follower

Size: Mounted plate is 2-11/16" from track and 4-3/4" wide
Finish: Anochrome (ANO)
Origin: Made in the USA
Packed: 10 per carton

476F ZC Letter Sized Index Follower

Size: Mounted plate is 7-5/8" from track and 10-3/4" wide
Finish: Anochrome (ANO)
Origin: Made in the USA
Packed: 10 per carton

476T ZC 26 Index Follower Track

Size: 26" long; may be recessed in a 2-1/4" x 1/4" slot
Finish: Anochrome (ANO)
Origin: Made in the USA
Packed: 10 per carton with screws

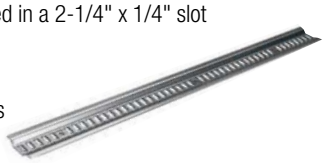

Label Holders

701 ANO Label Holder

Size: 2-5/8" x 1-7/16" for card dimension of 2" x 1"
Finish: Anochrome (ANO)
Packed: 100 per carton

704 ANO Label Holder

Size: 3-1/2" x 1-3/4" for card dimension of 2-15/16" x 1-1/2"
Finish: Anochrome (ANO)
Packed: 100 per carton

Drawer Locks

986 Series Drawer Lock

Size: Mounting flange: 1-1/2" x 2" wide with screw holes on 1-7/16" centers; barrel OD: 7/8"; bolt travel: 3/8"
Finish: Polished Nickel (NP)
Origin: Made in the USA
Packed: 12 per carton
Features: Available keyed alike; mounts to material up to 7/8" thick

986 Series Drawer Locks		
Product	**Finish**	**Keyed**
986KA 70 NP	Nickel (NP)	Alike

Drawer Pulls

819X Flush Drawer Pull

Size: 1-3/4" x 3-1/4" x 9/16" deep with beveled edges
Finish: Anochrome (ANO), Dull Brass (BR)
Packed: 12 per carton with screws

819X Flush Drawer Pull	
Product	**Finish**
819X ANO	Anochrome (ANO)
819X BR	Dull Brass (BR)

Non-stock item – minimum order quantities and additional lead time may apply.

Fasteners and Hinges

Surface Fasteners

320 STL Table Top Fastener, 1" width
323 STL Table Top Fastener, 5/8" width
324 STL Table Top Fastener, 3/4" width

Finish: Steel (STL)
Origin: Made in the USA
Packed: 100 per carton

341 ZC and 342 ZC Corner Brace

Size: 341: 1" x 1" installed
342: 2" x 2" installed
Finish: Zinc (ZC)
Origin: Made in the USA
Packed: 100 per carton

1547 STL Desk Top Fastener

Finish: Steel (STL)
Origin: Made in the USA
Packed: 100 per carton

1548 ZC Desk Top Fastener

Finish: Zinc (ZC)
Origin: Made in the USA
Packed: 500 per carton

521 ZC Hanger Plate (1/16" steel)

Size: 13/16" x 2"
Finish: Zinc (ZC)
Origin: Made in the USA
Packed: 100 per carton
Features: Use with 3/4" #10 flathead wood screws

Bolt Style Fastener

510 ZC Joint Fastener

Size: 4" bolt with plate 5/16" x 5/8" x 1-1/2"
Finish: Zinc (ZC)
Packed: 100 per carton
Features: An economical fastener, easy to install

513 ZC Joint Fastener

Size: 4" bolt with flat bar plate
7/16" x 3/16" x 1-1/4"
Finish: Zinc (ZC)
Packed: 100 per carton

517 ZC Joint Fastener

Size: 3-1/2" bolt with flat bar plate 7/16" x 3/16" x 1-1/4"
Finish: Zinc (ZC)
Packed: 100 per carton

Tite-Joint® Fastener

516 ZC designed for 3/4" wood

Size: Center-to-center 2" to 3-1/2"
Finish: Zinc (ZC)
Origin: Made in the USA
Features: Applies an even, controlled pressure between joint members to eliminate twisting and buckling

Pack Configurations	
Standard	25 per carton
Builders (BP)	100 per carton

516 Fasteners Zinc (ZC)		516 Joint Fastener Accessory Parts		
Standard	**Builders (BP)**	**Product**	**Description**	**Packed**
516/25 ZC	516/100 ZC	516-1	Draw Bolt	1 per carton
		516-60	Locking Sleeve	1 per carton
		516-62	Tightening Rod	1 per carton
		516-63	Drill Guide	1 per carton
		516-64	Drill	1 per carton
		516-80 100	Tightening Assembly	1 per carton

516

516-1

516-60

516-62

516-63

516-64

516-80 100

Hinges

472 ANO Steel Support Hinge

Size: 6" or 10"
Finish: Anochrome (ANO)
Origin: Made in the USA

Pack Configurations	
Standard	12 pair (left and right handed) per carton with screws
Optional	Left or right hand packaged separately in cartons of 24

472 Support Hinges Standard Pack		472 Support Hinges Optional Pack		
Standard	**Finish**	**Product**	**Finish**	**Handed**
472 ANO 6	Anochrome (ANO)	472L ANO 10	Anochrome (ANO)	Left
472 ANO 10	Anochrome (ANO)	472R ANO 10	Anochrome (ANO)	Right

Plastic Door Track Assemblies for Sliding Doors

P2413 1/8" Door Assembly Kits

Size: 48", 72" lengths
Finish: Tan (TAN)
Packed: 10 kits per carton
Application: Wood panels and plastic panels

P2413 1/8" Door Assembly Kits			
Product	**Finish**	**Length**	**Door Size**
P2413 TAN 48	Tan (TAN)	48"	1/8"
P2413 TAN 72	Tan (TAN)	72"	1/8"

P2413
TAN

P2417 1/4" Door Assembly Kits

Size: 48", 72" lengths
Finish: Tan (TAN), White (WH)
Packed: 10 kits per carton
Application: Wood panels and plastic panels

P2417 1/4" Door Assembly Kits			
Product	**Finish**	**Length**	**Door Size**
P2417 TAN 48	Tan (TAN)	48"	1/4"
P2417 TAN 72	Tan (TAN)	72"	1/4"
P2417 WH 48	White (WH)	48"	1/4"
P2417 WH 72	White (WH)	72"	1/4"

P2417
TAN

P2421 1/2" Door Assembly Kits

Size: 48", 72" lengths
Finish: Tan (TAN)
Packed: 10 kits per carton
Application: Wood panels and plastic panels

P2421 1/2" Door Assembly Kits			
Product	**Finish**	**Length**	**Door Size**
P2421 TAN 48	Tan (TAN)	48"	1/2"
P2421 TAN 72	Tan (TAN)	72"	1/2"

P2421
TAN

P2419 3/4" Door Assembly Kits

Size: 48", 72" lengths
Finish: Tan (TAN)
Packed: 10 kits per carton
Application: Wood panels and plastic panels

P2419 3/4" Door Assembly Kits			
Product	**Finish**	**Length**	**Door Size**
P2419 TAN 48	Tan (TAN)	48"	3/4"
P2419 TAN 72	Tan (TAN)	72"	3/4"

P2419
TAN

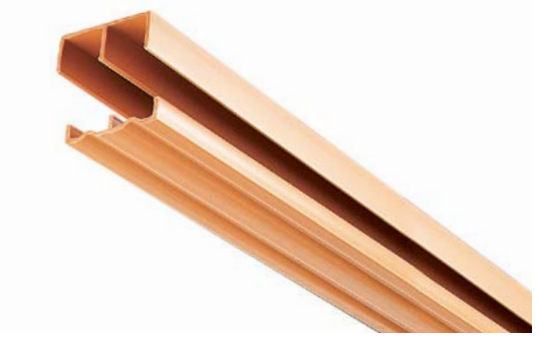

Non-stock item – minimum order quantities and additional lead time may apply.

Locks and Door Rollers

Sliding Glass Door Locks

962KA 440 CHR Adjustable Ratchet Lock for 3/4" glass
963KA 440 CHR Adjustable Ratchet Lock for 1/4" glass*

Size: Adjustable 3/4" to 3-3/8"
Finish: Chrome (CHR)
Packed: 12 per carton
Features: 962 fits any door to 3/4" with thumbscrew adjustment
963 fits 1/4" sliding glass doors, keyed alike

965 Ratchet Locks

Size: Adjustable from 1" to 3-3/8"
Finish: Polished Nickel (NP)
Packed: 12 per carton
Features: Adjustable lock for 1/4" sliding glass doors

965 Ratchet Locks		
Product	**Finish**	**Keyed**
965KA 50 NP	Polished Nickel	Alike

984KA 90 NP Plunger Lock

Size: Mounting flange: 7/8" x 2" with screw holes on 1-1/2" centers; Barrel: 7/8" outside diameter; Plunger travel: 15/32"; Plunger receptacle: 1/2" (outside diameter) x 7/16"
Finish: Polished Nickel (NP)
Packed: 12 per carton
Features: Keyed alike only

Door Rollers

420 STL Door Roller

Size: Frame: 7/16" x 1-7/8";
Nylon roller: 9/16" diameter; 5/16" wide
Finish: Steel (STL)
Packed: 100 per carton

422 STL Door Roller

Size: Frame: 5/8" x 1-13/16";
Nylon roller: 9/16" diameter; 1/2" wide
Finish: Steel (STL)
Packed: 100 per carton

423 STL Door Roller

Size: Frame: 5/8" x 1-13/16";
Steel roller: 5/8" diameter; 1/2" wide
Finish: Steel (STL)
Packed: 100 per carton

424 STL Door Roller

Size: Frame: 1" x 2";
Steel roller: 5/8" diameter; 7/8" wide
Finish: Steel (STL)
Packed: 50 per carton

WOODWORK INSTITUTE

* WoodWork Institute Acknowledged Products

Download at www.kv.com > Resource Library

Sheaves

427 STL Steel Sheave

Size: Frame: 2-15/16" x 1/2"; Wheel: 1-3/16" diameter
Finish: Steel (STL)
Packed: 50 per carton
Features: Ball-bearing round groove sheave; for use with KV tracks 455, 467, and 469

429 STL Steel Sheave

Size: Frame: 2-1/4" x 3/8"; Wheel: 1" diameter
Finish: Steel (STL)
Packed: 100 per carton
Features: Round groove sheave; for use with KV tracks 455, 467, and 469

430 STL Steel Sheave

Size: Frame: 2-3/4" x 1/2"; Wheel: 1-3/8" diameter
Origin: Made in the USA
Finish: Steel (STL)
Packed: 50 per carton
Features: Ball-bearing round groove sheave; for use with KV tracks 455, 467, and 469

430 N STL Neoprene Treaded Steel Sheave

Size: Frame: 2-3/4" x 1/2"; Wheel: 1-3/8" diameter
Finish: Steel (STL)
Packed: 50 per carton
Features: Flat neoprene tire, ball-bearing sheave; used without track

592 STL Convex Nylon Sheave

Size: Frame: 9/32" x 2-1/4"; Wheel: 1-3/16" diameter
Finish: Steel (STL)
Packed: 100 per carton
Features: Convex nylon wheel for thin doors; for use with inverted KV track 455

594 NYLON Concave Nylon Sheave

Size: Frame: 2-15/16" x 1/2"; Wheel: 1-3/16" diameter
Finish: Steel (STL)
Packed: 50 per carton
Features: For doors to 1-1/8" thick; nylon round groove wheel; for use with all KV tracks

607 ZC Side Mount Steel Sheave

Size: Frame: 2-5/16" x 1-5/16"; Wheel: 1-3/8" diameter
Finish: Steel (STL)
Packed: 50 per carton
Features: Heavy-duty ball-bearing sheave with side fastening plate; for use with KV tracks 455, 467, and 469

620 STL Steel Sheave

Size: Frame: 7/16" x 1-7/8"; Wheel: 11/16" x 9/32"
Finish: Steel (STL)
Packed: 100 per carton
Features: Axle bearing grooved steel roller; for use with KV tracks 455, 467, and 469

400A STL Concealed Steel Sheave

Size: Case: 1-1/4" x 5/16"; Flange: 1-3/4" x 9/16"
Finish: Steel (STL)
Packed: 100 per carton
Features: Ball-bearing sheave drive type; for use with KV tracks 455, 467, and 469

402 STL Concealed Steel Sheave

Size: Frame: 1-1/4" x 5/16"; Flange: 2-1/4" x 5/16"
Finish: Steel (STL)
Packed: 100 per carton
Features: Ball-bearing sheave; for use with KV tracks 455, 467, and 469

580 STL Concealed Steel Sheave

Size: Case: 1-1/4" x 5/16"; Flange: 1-3/4" x 9/16"
Finish: Steel (STL)
Packed: 100 per carton
Features: Nylon round groove sheave for light doors; for use with KV tracks 455, 467, and 469

582 STL Concealed Steel Sheave

Size: Case: 1-1/4" x 5/16"; Flange: 2-1/4" x 5/16"
Finish: Steel (STL)
Packed: 100 per carton
Features: Nylon round groove sheave; for use with KV tracks 455, 467, and 469

Steel Tracks and Guides for Sliding Doors

455 STL 144 Lower Track

Size: 19/64" height x 21/32" width x 144" length
Finish: Wrought Steel (STL)
Origin: Made in the USA
Packed: 1 each

455 SS 144 Lower Track

Size: 19/64" height x 21/32" width x 144" length
Finish: Stainless Steel (SS)
Origin: Made in the USA
Packed: 1 each

467 STL 144 Lower Track

Size: 19/64" height x 7/16" width x 144" length
Finish: Steel (STL)
Origin: Made in the USA
Packed: 1 each

469 ZC 144 Double Lower Track

Size: 1/4" height x 1" width x 144" length
Finish: Zinc (ZC)
Origin: Made in the USA
Packed: 1 each

953 ZC 144 Top Door Divider

Size: 5/8" height x 5/8" width x 144" length
Finish: Pre-coated Steel (ZC)
Origin: Made in the USA
Packed: 1 each
Features: Upper T-guide separates the sliding doors at the top

455 STL

455 SS

467

953

Roll-Ezy Ball-Bearing Sliding Glass Door System

Complete Assembly

P992 Large Glass Door Track Assembly Kit

Includes: (1) 993 Upper Channel, (2) 995 Shoe, (2) 997 Carrier, (1) 999 Lower Track
Origin: Made in the USA
Packed: 1 set per carton
Features: For large glass door applications, for 1/4" thick glass installations
Applications: Commonly used for trophy cases and retail displays

Complete Assemblies	
Product	**Installation Opening Width**
P992 ZC 36	36"
P992 ZC 48	48"
P992 ZC 60	60"
P992 ZC 72	72"

Installation Notes & Recommendations:
Knape & Vogt does not recommend butt-joints and/or openings longer than 12 feet.
We recommend that the height to width ratio for glass doors should not exceed 2:1.

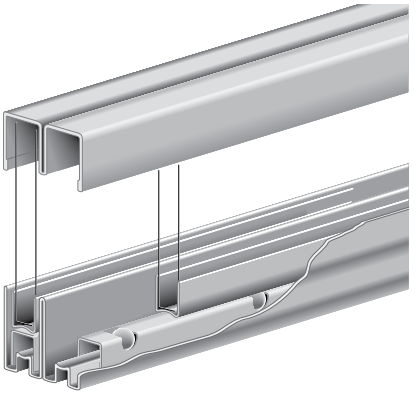

Components Sold Separately

953 ZC 144 Top Door Divider

Size: 5/8" width x 5/8" height x 144" length
Finish: Zinc (ZC)
Origin: Made in the USA
Packed: 1 each
Features: Pre-coated steel upper T-guide for wood framed installations; for use with 1/4" glass doors only; for large glass door applications

953

993 ZC 144 Upper Channel

Size: 15/16" wide x 5/8" height x 144" length
Finish: Zinc (ZC)
Origin: Made in the USA
Packed: 1 each
Features: Upper channel for top and ends of opening; wide divider maintains door position; for large glass door applications

993

995 ZC 144 Door Shoe

Size: 21/64" wide x 7/16" height x 144" length
Finish: Zinc (ZC)
Origin: Made in the USA
Packed: 1 each
Features: Lightly curved bottom for free rolling position on ball-bearings; for 1/4" glass, scant or full; for large glass door applications

995

997 ZC 144 Ball Carrier

Size: 3/8" wide x 17/32 height x 144" length
Finish: Zinc (ZC)
Origin: Made in the USA
Packed: 1 each
Features: Ball-bearing carrier has free rolling balls on 3" centers; unique design creates two point suspension between shoe and lower rack; for large glass door applications

997

999 ZC 144 Lower Track

Size: 1" wide x 1" high x 144" length
Finish: Zinc (ZC)
Origin: Made in the USA
Packed: 1 each
Features: Balls ride freely on curved anvil with no contact against sides of lower track; for large glass door applications

999

NOTE: For each foot of opening use 1' of upper channel and lower track and shoe (plus 1" per door for overlap), with 1-1/2' of carrier (1-1/2 times door width for each door). Glass is cut 1-1/4" lower than height of opening.

Roll-Ezy Aluminum Sliding Glass Door System

Complete Assembly

P1092 Small to Medium Glass Door Track Assembly Kit

Includes: (1) 1093 Upper Channel, (4) 1097 Rollers, (4) 1085 Vinyl Guides, (2) 1095 Shoe, (1) 1099 Lower Track
Packed: 1 set per carton
Features: For small to medium size glass door installations; for 1/4" thick glass
Application: Used for small to medium bypassing 1/4" thick glass doors; commonly used in furniture, cabinets, displays and reception windows

Complete Assemblies	
Product	**Length**
P1092 ANOD 36	36"
P1092 ANOD 48	48"
P1092 ANOD 60	60"
P1092 ANOD 72	72"

Installation Notes & Recommendations:
Knape & Vogt does not recommend butt-joints and/or openings longer than 12 feet.
We recommend that the height to width ratio for glass doors should not exceed 2:1.

1093 144 Upper Channel

Size: 1-3/16" width x 9/16" height x 144" length
Finish: Aluminum (AL)
Origin: Made in the USA
Packed: 1 each
Features: Double channel for tops, bottoms, and ends; for small to medium size glass door installations; for 1/4" thick glass

1093

1095 144 Door Shoe

Size: 27/64" width x 1" height x 144" length
Finish: Aluminum (AL)
Origin: Made in the USA
Packed: 1 each
Features: Rollers to be inserted in the bottom; for small to medium size glass door installations; for 1/4" thick glass

1095

1096 144 Single Lower Track

Size: 31/64" width x 15/32" height x 144" length
Finish: Aluminum (AL)
Origin: Made in the USA
Packed: 1 each
Features: For single doors, or may be used with 1093 double channel for covered installation; for small to medium size glass door installations; for 1/4" thick glass

NOTE: Cut glass 1-1/2" lower than opening when using 1096/1093 tracks

1096

1099 144 Double Lower Track

Size: 1-1/16" width x 1/4" height x 144" length
Finish: Aluminum (AL)
Origin: Made in the USA
Packed: 1 each
Features: For small to medium size glass door installations; for 1/4" thick glass

NOTE: Cut glass 1-3/16" lower than opening when using 1099 track

1099

Download at www.kv.com > Resource Library

Roll-Ezy Aluminum Sliding Glass Door System

1085 VINYL** Guide

Size: 7/8" length
Finish: Vinyl (VINYL)
Origin: Made in the USA
Packed: 100 per carton
Features: Vinyl guide fits over the top of glass for noiseless operation in upper channel; for small to medium size glass door installations; for 1/4" thick glass

1087 RUB Rubber Bumper

Finish: Rubber (RUB)
Packed: 100 per carton
Features: Rubber bumper installs in jambs to cushion glass

1097 NYLON** Nylon Rollers

Finish: Nylon (NYLON)
Origin: Made in the USA
Packed: 100 per carton
Features: Rubber roller press fits into bottom of 1095 shoe

1098 ZC** Steel Ball-bearing Roller

Finish: Zinc (ZC)
Origin: Made in the USA
Packed: 20 per carton
Features: Steel ball-bearing roller press fits into bottom of 1095 shoe

1088 ANOD** Knob Pull

Finish: Zinc plated steel (ANOD)
Origin: Made in the USA
Packed: Sets of: 2 knobs, screws, and rubber bumpers per envelope
50 sets per carton
Features: Mounts to 1095 shoe (1092 assembly)

**

MADE IN USA

KV Powered by Samet: Sliding Door

SMT 75T

Features:

- 8mm Height Adjustability
- 165 lbs carrying capacity
- European styling
- Soft-close mechanism for smooth & quiet operation
- Compact and light for easy installation
- Designed for easy door mounting and dismounting

SMT 75T		
Type	**Pack**	**Part**
Soft-Close Mechanism	48 sets	KVS SDS 100
Single Female Door Track 2.5 Mt L Aluminum	48 pcs	KVS SDS 101
Double Female Door Track 2.5 Mt L Aluminum	12 pcs	KVS SDS 102
Adjustable Wheel Mechanism	24 sets	KVS SDS 103

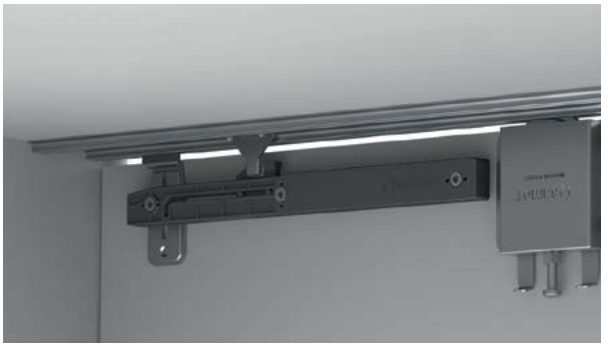

KV Powered by Samet: Fittings

Jetfix/Samfix

Features:

- For corner connectors of wood furniture and cabinets
- Jetfix features combined bolt / dowel system
- Expanding dowel provides easy assembly and disassembly
- Samfix cams complete system for easy installation with standard tools (screwdriver)
- Cost efficient - durable and reusable
- Caps for Samfix available for clean aesthetics

Jetfix

Samfix

Jetfix/Samfix System for Wood Corner Assembly		
Type	**Pack**	**Part**
Jetfix Bolt Expandable Dowel	2000 pcs	KVSFB D 200
Samfix Cam 15mmx12mm ZN	2000 pcs	KVSFB C 301 ZN
Samfix Cam 15mmx13.2mm ZN	2000 pcs	KVSFB C 302 ZN
Samfix Cam Cover Cap White	2000 pcs	KVSFB CC 300 WH

KNAPE&VOGT®
POWERED BY samet™

Closet Hardware

Round Closet Rods. 130
Round Closet Rod Mounting Flanges and Accessories 131
Oval Closet Rods 132
Adjustable Closet Rods. 133
Closet Rods and Shelf Brackets 134
Closet Shelf Brackets. 136
Utility and Coat Hooks 137
Valet Rods, Clothing Carriers and Towel Bars. 138
Closet Culture® Modular Closet Storage System 139
Closet Planning 143

Round Closet Rods

660 Series Heavy-Duty Round Closet Rods

660 Series Heavy-Duty Round Closet Rod

Diameter: Outside 1-1/16"; Inside 29/32"; Wall thickness 0.087"
Finish: Stainless Steel (SS)
Origin: Made in the USA
Packed: 6 per carton
Features: Steel core with solid stainless steel clad wrap

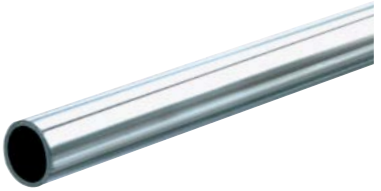

660 Series Heavy-Duty Round Closet Rods	
Length	**Stainless Steel (SS)**
72"	660 SS 72
96"	660 SS 96
120"	660 SS 120
144"	660 SS 144

750 Series Heavy-Duty Round Closet Rods

750 1 Heavy-Duty Round Closet Rod

Diameter: Outside: 1-1/16"; Inside: 29/32"; Wall thickness: 0.075"
Finish: Chrome (CHR)
Packed: 6 per carton
Features: Invisible seam

750 5 Heavy-Duty Round Closet Rod

Diameter: Outside 1-5/16"; Inside 1-5/32"; Wall thickness 0.075"
Finish: Chrome (CHR)
Packed: 6 per carton
Features: Invisible seam

750 Series Heavy-Duty Round Closet Rods		
Length	**750 1 Series**	**750 5 Series**
72"	750 1 72	750 5 72
96"	750 1 96	750 5 96
120"	750 1 120	750 5 120
144"	750 1 144	750 5 144

770 Series Extra-Duty Round Closet Rods

770 1 Extra-Duty Round Closet Rod

Diameter: Outside: 1-1/16"; Inside: 27/32"; Wall thickness: 0.106"
Finish: Chrome (CHR)
Packed: 6 per carton
Features: Invisible seam

770 5 Extra-Duty Round Closet Rod

Diameter: Outside: 1-5/16"; Inside: 61/64"; Wall thickness: 0.106"
Finish: Chrome (CHR)
Packed: 6 per carton
Features: Invisible seam

770 Series Extra-Duty Round Closet Rods		
Length	**770 1 Series**	**770 5 Series**
72"	770 1 72	770 5 72
96"	770 1 96	770 5 96
120"	770 1 120	770 5 120
144"	770 1 144	770 5 144

Download at www.kv.com > Resource Library

Round Closet Rod Mounting Flanges and Accessories

734 CHR Closed Wall-Mount Flange*

Finish: Chrome (CHR)
Packed: 50 per carton with screws
Holes: 2 screw holes on 2" centers
Features: For 660, 750 1 and 770 1 Series Closet Rods

CHR

735 CHR Open Wall-Mount Flange*

Finish: Chrome (CHR)
Packed: 50 per carton with screws
Holes: 2 screw holes on 2" centers
Features: For 660, 750 1 and 770 1 Series Closet Rods

CHR

764 CHR Closed Wall-Mount Flange*

Finish: Chrome (CHR)
Packed: 12 per carton with screws
Holes: 3 holes spaced 1-1/8" from center
Features: For 750 5 and 770 5 Series Closet Rods

766 CHR Open Wall-Mount Flange*

Finish: Chrome (CHR)
Packed: 12 per carton with screws
Holes: 2 holes on 2-1/4" centers, one at 90°
Features: For 750 5 and 770 5 Series Closet Rods

730 ANO End Cap

Finish: Anochrome (ANO)
Packed: 50 per carton
Features: For use with 660 Series Closet Rods

731 ANO End Cap

Finish: Anochrome (ANO)
Packed: 50 per carton
Features: For 750 1 and 770 1 Series Closet Rods
NOTE: May need to modify prongs for 750 1 installation

732 ANO End Cap

Finish: Anochrome (ANO)
Packed: 50 per carton
Features: For 750 5 and 770 5 Series Closet Rods
NOTE: May need to modify prongs for 750 5 installation

757 ANO Pilaster Flange*

Finish: Anochrome (ANO)
Origin: Made in the USA
Packed: 100 per carton
Features: Fits 255 or 233 series pilaster; for 660, 750 1 and 770 1 Series Closet Rods

632 CHR Line Bore Flange

Finish: Chrome (CHR)
Packed: 100 per carton
Features: Screw hole for extra mounting strength; two 5mm pins; for use with 750 1 and 770 1 Series Closet Rods

760 ANO 24 Center Closet Rod Support

Finish: Anochrome (ANO)
Origin: Made in the USA
Packed: 12 per carton with screws
Features: Center support 24" can be cut to size; for 660, 750 1 and 770 1 Series Closet Rods

WOODWORK INSTITUTE

* WoodWork Institute Acknowledged Products

Oval Closet Rods

880 Series Extra-Duty Oval Closet Rod

880 Series Extra-Duty Oval Closet Rod

Size: 30mm high x 15mm wide; wall thickness 1.2mm
Finish: Chrome (CHR)
Packed: 10 per carton lengths
Features: Heavy gauge, invisible welded seam

Length	Chrome (CHR)
96"	880 CHR 96
144"	880 CHR 144

Mounting Flanges

Front Back

881 CHR Mounting Flange

Finish: Chrome (CHR)
Packed: 50 per carton
Holes: Screw hole for extra mounting strength
Features: For use with 880 oval tubing; for line bore installation; two 5mm pins

Download at www.kv.com > Resource Library

Adjustable Closet Rods

KV2 Series Adjustable Closet Rods

Finish: White (WH), Zinc (ZC)
Features: Attached end flanges; hardware included; 2-1/2" hook drop depth

Pack Configurations			
Standard Pack	10 per carton up to 60"–96" size; 5 per carton for 72"–120" and above		
Builders Pack (BP)	20 per carton		
	KV2 Zinc (ZC)	**KV2 White (WH)**	**KV2BP Zinc (ZC)**
Adjustable Length	**Standard Pack**	**Standard Pack**	**Builders Pack (BP)**
18"–30"	KV2 ZC 18	KV2 WH 18	KV2BP ZC 18
30"– 48"	KV2 ZC 30	KV2 WH 30	KV2BP ZC 30
48"–72"	KV2 ZC 48	KV2 WH 48	–
60"–96"	KV2 ZC 60	KV2 WH 60	–
72"–120"	KV2 ZC 72	KV2 WH 72	–
96"–144"	KV2 ZC 96	–	–

WH

ZC

29201 ANO Center Hanger Support

Finish: Anochrome (ANO)
Packed: 12 per carton
Features: Use with installations of 72" or more in width

RP0020 Series Heavy-Duty Adjustable Closet Rods

Diameter: 1-1/4" outside diameter
Finish: Brushed Nickel (BN), Bronze (BRZ), Chrome (CH), Warm White (WT)
Packed: 6 per carton
Features: Adjustable heavy-duty closet rods are quick and simple to install and create a quality finished look; the rod quickly attaches to included flanges for easy installation, no cutting necessary; hardware included

Heavy-Duty Adjustable Closet Rods				
Adjustsble Length	**Brushed Nickel (BN)**	**Bronze (BRZ)**	**Chrome (CH)**	**Warm White (WT)**
30"–48"	RP0020-30/48BN	RP0020-30/48BRZ	RP0020-30/48CH	RP0020-30/48WT
48"–72"	RP0020-48/72BN	RP0020-48/72BRZ	RP0020-48/72CH	RP0020-48/72WT
72"–120"	RP0020-72/120BN	RP0020-72120BRZ	RP0020-72/120CH	RP0020-72/120WT

BN

BRZ

CH

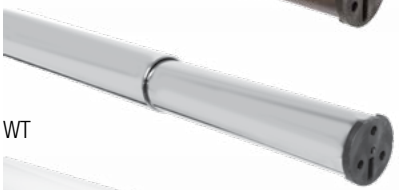

WT

Closet Rods and Shelf Brackets

Closet Rod and Shelf Brackets

0042 Series Regular-Duty Adjustable Rod and Shelf Bracket

Finish: Warm White (WT)
Packed: 20 per carton
Hook Depth: 2-1/2"
Features: Holds up to 300 lbs. per pair; KV2 compatible; use with up to 1-3/8" OD closet rods; for 11"–14" deep shelves; install with or without wall cleat; shelf platform is 10" without cleat; 14 gauge steel platform

Warm White (WT)
RP-0042-BWT

0043 Series Regular-Duty Adjustable Rod and Shelf Bracket

Finish: Warm White (WT)
Packed: 20 per carton
Hook Depth: 3"
Features: Holds up to 300 lbs. per pair; use with up to 1-3/8" OD closet rods; for 11"–14" deep shelves; install with or without wall cleat; shelf platform adjusts from 10-1/4"–10-3/4"; 14 gauge steel construction

Warm White (WT)
RP-0043-WT

1194 Series Heavy-Duty Adjustable Rod and Shelf Bracket

Finish: Cream White (CREAM), Bright White (WH)
Packed: 10 per carton
Hook Depth: 3"
Features: Holds up to 500 lbs. per pair; use with up to 1-3/8" OD closet rods; for 11"–14" deep shelves; install with or without wall cleat; shelf platform adjusts from 10-1/4" – 10-3/4"; low profile design; 13 gauge steel construction

Cream White (CREAM)	Bright White (WH)
1194 CREAM	1194 WH

Fixed Closet Rod and Shelf Brackets

0044 Series Regular-Duty Fixed Rod and Shelf Bracket

Finish: Warm White (WT)
Packed: 20 per carton
Hook Depth: 2-1/2"
Features: Holds up to 400 lbs. per pair; KV2 compatible; use with up to 1-3/8" OD closet rods; for 11"–14" deep shelves; 10-7/8" shelf platform; one-piece design provides superior strength; 16 gauge steel construction

Warm White (WT)
RP-0044-BWT

1195 Series Heavy-Duty Fixed Rod and Shelf Bracket

Finish: Cream White (CREAM)
Bright White (WH)
Packed: 10 per carton
Hook Depth: 2-1/2"
Features: Holds up to 500 lbs. per pair; KV2 compatible; use with up to 1-3/8" OD closet rods; for 11"–14" deep shelves; 11" shelf platform; 12 gauge steel construction

Cream White (CREAM)	Bright White (WH)
1195 CREAM	1195 WH

0045 Series Heavy-Duty Fixed Rod and Shelf Bracket

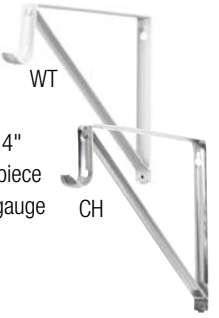

Finish: Chrome (CH), Warm White (WT)
Packed: 20 per carton
Hook Depth: 3"
Features: Holds up to 500 lbs. per pair; use with up to 1-3/8" OD closet rods; for 11"–14" deep shelves; 11" shelf platform; one-piece design provides superior strength; 14 gauge steel construction

Chrome (CH)	White (WT)
RP-0045-CH	RP-0045-WT

0052 Series Heavy-Duty Fixed Rod and Shelf Bracket

Finish: Warm White (WT)
Packed: 20 per carton
Hook Depth: 3"
Features: Holds up to 500 lbs. per pair; use with up to 1-3/8" OD closet rods; for 10-1/2" – 14" deep shelves; 10-5/16" shelf platform; patented Slide-Thru™ feature; 14 gauge steel construction

Warm White (WT)
RP-0052-WT

Closet Rods and Shelf Brackets

Fixed Closet Rod and Shelf Brackets

0495 Series Super-Duty Fixed Rod and Shelf Bracket

Finish: Brushed Nickel (BN), Bronze (BRZ), Chrome (CH), Warm White (WT)
Packed: 10 per carton
Hook Depth: 3"
Features: Holds up to 1,000 lbs. per pair; for 11-1/2" –14" deep shelves; snap-in pole feature for 1-1/4" – 1-5/16" OD closet rods; 11"-1/4" shelf platform; patented Slide-Thru™ feature; 10 gauge steel construction

Brushed Nickel (BN)	Bronze (BRZ)	Chrome (CH)	White (WT)
RP-0495-BN	RP-0495-BRZ-10	RP-0495-CH	RP-0495-WT

BN

BRZ

CH

WT

0496 Series Extra-Duty Fixed Rod and Shelf Bracket

Finish: Warm White (WT)
Packed: 5 per carton
Hook Depth: 3-3/4"
Features: Holds up to 500 lbs. per pair; for 14"–18" deep shelves; snap-in pole feature for 1-1/4"–1-5/16" OD closet rods; 14" shelf platform; patented Slide-Thru™ feature; 13 gauge steel construction

Warm White (WT)
RP-0496-WT

WT

Closet Shelf Brackets

0040 Series Regular-Duty Adjustable Shelf Bracket

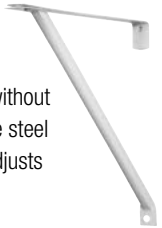

Finish: Warm White (WT)
Packed: 20 per carton
Features: Holds up to 150 lbs. per pair; install with or without wall cleat; 13 gauge steel platform; 16 gauge steel support strut; for 11" to 14" deep shelves; adjusts from 10-1/4" to 10-3/4"

Size	Warm White (WT)
12"	0040-WTS

0046 and 0048 Series Heavy-Duty Fixed Shelf Bracket

Size: 12", 16", 20"
Finish: Warm White (WT)
Packed: 20 per carton – 12", 16"
6 per carton – 20"
Features: Holds up to 500 lbs. per pair; 14 gauge steel construction

Size	Warm White (WT)
12"	RP-0046-WT
16"	0046-15WT
20"	RP-0048-19WT

0494 Series Super-Duty Fixed Shelf Bracket

Finish: Brushed Nickel (BN), Bronze (BZ), Chrome (CH), Warm White (WT)
Packed: 10 per carton
Features: Holds up to 1,000 lbs. per pair; for 11-1/2" to 14" deep shelves; 11-1/4" shelf platform; 10 gauge steel construction

Brushed Nickel (BN)	Bronze (BRZ)	Chrome (CH)	Warm White (WT)
RP-0494-BN	RP-0494-BRZ	RP-0494-CH	RP-0494-WT

Utility and Coat Hooks

Utility Hooks

1132 ANO Single Prong Utility Hook

Size: 4", 6" and 10"
Finish: Anochrome (ANO)
Origin: Made in the USA
Packed: 12 per carton with screws
Features: Sturdy hook for commercial use

SKU Number	Length
1132 ANO 4	4"
1132 ANO 6	6"
1132 ANO 10	10"

PKV3 ANO Heavy-Duty Single Prong Utility Hook

Size: 5-1/2" or 10" lengths
Finish: Anochrome (ANO)
Origin: Made in the USA
Packed: 10 units per carton with screws
Features: Sturdy steel rod for extra hanging space

SKU Number	Length
PKV3 ANO 5-1/2	5-1/2"
PKV3 ANO 10	10"

Garment Hook

2038 CHR Coat and Hat Hook

Finish: Chrome (CHR)
Packed: 12 units per carton with screws
Features: Classic institutional garment hook; coat and hat hook

Valet Rods, Clothing Carriers and Towel Bars

Hang Rod

753 ANO Telescopic Valet Rod

Size: 7/16" diameter rod, extends 5/8"–8-1/4"
Finish: Anochrome (ANO)
Origin: Made in the USA
Packed: 1 per carton with screws; 12 per carton
Features: Extends from 5/8"–8-1/4"; for convenient hanging storage; retract to get it out of the way when not in use

Clothing Carrier

KV1 ANO Clothing Carrier

Size: 10": fits 10" shelf only
12": fits 12"–16" depth shelves
16": fits 16"–20" depth shelves
20": fits 20"–24" depth shelves
Finish: Anochrome (ANO)
Origin: Made in the USA
Packed: 1 per bag with screws, 12 bags per carton
Features: Mounts under closet shelves, greatly increasing capacity, and makes garments more accessible

SKU Number	Travel
KV1 ANO 10	10"
KV1 ANO 12	12"
KV1 ANO 16	16"
KV1 ANO 20	20"

Heavy-Duty Slide-Out Towel Bar

P793 ANO Slide-Out Towel Bar

Size: 18" length x 5" width
Finish: Anochrome (ANO)
Packed: 10 units per carton
Features: Side mounts to either left or right hand side of the cabinet; rack mounts with 4 screws; all steel construction; three bars accommodate at least three towels or cloths

Non-stock item – minimum order quantities and additional lead time may apply.

Closet Culture® Modular Closet Storage System

Hang Rail

MADE IN USA

0321 Series Heavy-Duty Hang Rail

Dimensions: 48"L x .38"D x 1.75"H
Material: Steel
Finish: Champagne Nickel (CN)
Satin Gold (SG)
Features: Hang rail required for system installation; heavy-duty steel construction provides strength and stability; holds 800 lbs. (200 lbs. per screw) installed on wall studs. Holds 400 lbs. (100 lbs. per screw) installed into drywall with anchors; quick, easy installation and leveling

Size	Champagne Nickel (CN)	Satin Gold (SG)
48"	0321-48CN	0321-48SG

Hang Rail Cover

0321-CVR Series Decorative Hang Rail Cover

Dimensions: 22.4"L x .41"D x 1.5"H
Material: Steel
Finish: Champagne Nickel (CN)
Satin Gold (SG)
Features: Neatly covers hang rail mounting hardware; use 22" cover to ensure standards are properly spaced along hang rail for fast installation of components and accessories

Size	Champagne Nickel (CN)	Satin Gold (SG)
48"	0321-CVR-22CN	0321-CVR-22SG

Heavy-Duty Standard

MADE IN USA

0119 Series Heavy-Duty Standard

Dimensions: 48" - 48"L x 1.0"D x 1.0"W
78" - 78"L x 1.0"D x 1.0"W
Material: Steel
Finish: Champagne Nickel (CN)
Satin Gold (SG)
Features: Dual slot design is adjustable in 1-1/4" increments; mounts on hang rail; heavy-duty steel construction

Size	Champagne Nickel (CN)	Satin Gold (SG)
48"	0119-48CN	0119-48SG
78"	0119-78CN	0119-78SG

Standard Extension Kit

MADE IN USA

KT-0119 Series Standard Extension Kit

Dimensions: 32.25"L x 1"D x 1"W
Material: Steel
Finish: Champagne Nickel (CN)
Satin Gold (SG)
Features: Extends 48" standard to 78"; creates more space for additional shelves and accessories below existing installation; for use anywhere on the standard

Size	Champagne Nickel (CN)	Satin Gold (SG)
30"	KT-0119-29CN	KT-0119-29SG

Shelf Bracket

0323 Series Heavy-Duty Shelf and Accessory Bracket

Dimensions: 16.4"L x .53"W x 2.9"H
Material: Steel, Plastic
Finish: Champagne Nickel (CN)
Satin Gold (SG)
Features: Mounts on 0119 standards for easy installation of wood or wire shelves and all accessories; heavy-duty steel construction; accommodates closet pole hook; bracket cap securely locks shelves and accessories in place

Size	Champagne Nickel (CN)	Satin Gold (SG)
16"	0323-16CN	0323-16SG

Hardware Packs

0300 Series Standard Installation Hardware Packs

Material: Steel
Finish: Champagne Nickel (CN)
Satin Gold (SG)
Features: (16) #10 x 2-1/2" flat head screws per poly pack; for use with Closet Culture Hang Rail and Standards

Champagne Nickel (CN)	Satin Gold (SG)
CD-0300-HDWR	CD-0300-HDWR-SG

ClosetCulture®
Strong. Flexible. Elegant.

Closet Culture® Modular Closet Storage System

Closet Pole Hook

0123-HOOK Series Closet Pole Hook

Dimensions: 5.1"H x 1.2"W x 3.1"D
Material: Plastic
Finish: Champagne Nickel (CN)
Satin Gold (SG)
Features: Holds up to 75 lbs per pair on 24" centers; Slide-Thru™ feature allows hangers to move along pole without obstruction; unique design accommodates 1", 1-1/4" and 1-5/16" poles; snaps into 0323 shelf bracket for easy installation of closet poles

Champagne Nickel (CN)	Satin Gold (SG)
CD-0123-HOOK-CN	CD-0123-HOOK-SG

Closet Pole (End Caps Included)

0312 Series Closet Pole

Dimensions: 23.7"L x 1.4"D x 1.4"H
Material: Steel
Finish: Champagne Nickel (CN)
Satin Gold (SG)
Features: 23" poles are easy to install, snap into place; connect multiple poles together for longer lengths; 1" diameter steel construction; connectors and end caps included

Size	Champagne Nickel (CN)	Satin Gold (SG)
23"	0312-23CN	0312-23SG

Pants Rack Kit

0335-PRK Series Pull-Out Pants Rack Kit

Dimensions: 23.5"W x 16.4"D x 2.9"H
Material: Steel
Finish: Champagne Nickel (CN)
Satin Gold (SG)
Features: Keeps up to 8 pairs of pants organized and easy to access; sturdy steel; construction; angled design keeps pants on the rack; pulls out smoothly on roller slides; includes pants rack and two brackets

Champagne Nickel (CN)	Satin Gold (SG)
0335-PRK-CN	0335-PRK-SG

Shoe Rack Kit

0335-SRK Series Pull-Out Shoe Rack Kit

Dimensions: 23.5"W x 16.4"D x 4.7"H
Material: Steel
Finish: Champagne Nickel (CN)
Satin Gold (SG)
Features: Keeps 4–6 pairs of shoes neatly organized; reversible rack: shoes can be displayed facing inward or outward; sturdy steel construction; accommodates up to a men's size 12 shoe; add wood fascia for a finished look; Includes shoe rack, two brackets and fascia mounting screws

Champagne Nickel (CN)	Satin Gold (SG)
0335-SRK-CN	0335-SRK-SG

Basket Surround Kit

0335-SRND Series Pull-Out Surround Kit

Dimensions: 23.5"W x 16.4"D x 2.9"H
Material: Steel
Finish: Champagne Nickel (CN)
Satin Gold (SG)
Features: Use with mesh basket (0335A-BSKT, not included); pulls out smoothly on roller slides for easy access to basket contents; sturdy steel construction; add wood fascia for a finished look; includes basket surround, two brackets and fascia mounting screws

Champagne Nickel (CN)	Satin Gold (SG)
0335-SRND-CN	0335-SRND-SG

Mesh Basket

0335A-BSKT Series Mesh Basket

Dimensions: 22.5"W x 16.8"D x 7.3"H
Material: Steel
Finish: Champagne Nickel (CN)
Satin Gold (SG)
Features: Use with basket surround kit (0335-SRND, not included); easy access handle; embossed bottom for added strength

Size	Champagne Nickel (CN)	Satin Gold (SG)
7"	0335A-BSKT-7CN	0335A-BSKT-7SG

ClosetCulture®
Strong. Flexible. Elegant.

Download at www.kv.com > Resource Library

Closet Culture® Modular Closet Storage System

Wood Shelf

MADE IN USA

0330 Series Decorative Wood Shelves

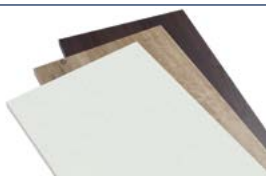

Dimensions: 22.8"W x .75"H x 15.78"D
Material: Wood
Finish: Espresso (ESP)
Driftwood (MPL)
White Oak (WT)
Features: Wood construction with laminated finish; attaches easily to 0323 shelf bracket with required shelf clips (0330-HDWR, not included)

Size	Espresso (ESP)	Driftwood (MPL)	White Oak (WT)
23"	0330-1623ESP	0330-1623MPL	0330-1623WT

Wood Fascia

MADE IN USA

0339 Series Decorative Wood Fascia

Dimensions: 23.3"W x 2.5"H x .75"D
Material: Wood
Finish: Espresso (ESP)
Driftwood (MPL)
White Oak (WT)
Features: Installs on front of wire shelves and accessories for a finished look; wood construction with laminated finish

Espresso (ESP)	Driftwood (MPL)	White Oak (WT)
0339-23ESP	0339-23MPL	0339-23WT

Wire Shelf

0331 Series Wire Shelf

Dimensions: 23.1"W x .5"H x 15.8"D
Material: Wire
Finish: Champagne Nickel (CN)
Satin Gold (SG)
Features: Sturdy steel wire; ventilated design facilitates air circulation; shelf mounts easily into 0323 shelf bracket; add wood fascia for a finished look, fascia mounting screws included

Size	Champagne Nickel (CN)	Satin Gold (SG)
23"	0331-1623CN	0331-1623SG

Hardware Packs

0330 Series Wood Shelf Clips Installation Hardware Packs

Material: Steel
Finish: Champagne Nickel (CN)
Satin Gold (SG)
Features: Enough hardware for 6 shelf installations; (24) clips and (24) screws

Champagne Nickel (CN)	Satin Gold (SG)
CD-0330-HDWR	CD-0330-HDWR-SG

ClosetCulture®
Strong. Flexible. Elegant.

Closet Culture® Modular Closet Storage System

Modular Closet Kits

0300-KITA Series Modular Closet Kits (Shelving not included)

Dimensions: 4' unit - 5.50"W x 49.13"H x 3.68"D
6' unit - 5.38"W x 49.13"H x 5.81"D
8' unit - 5.38"W x 49.13"H x 5.81"D

Material: Steel, Plastic

Finish: Champagne Nickel (CN), Satin Gold (SG)

Features: Includes hardware components to install a complete closet system: hang rail(s), standards, hang rail covers, shelf brackets, closet poles, closet pole hooks and installation hardware; wood and wire shelves, accessories and fascia sold separately; adjustable for multiple configurations

Size	Champagne Nickel (CN)	Satin Gold (SG)
4'	0300-KITA-4CN	0300-KITA-4SG
6'	0300-KITA-6CN	0300-KITA-6SG
8'	0300-KITA-8CN	0300-KITA-8SG

0300-KITA-4CN

0300-KITA-6CN

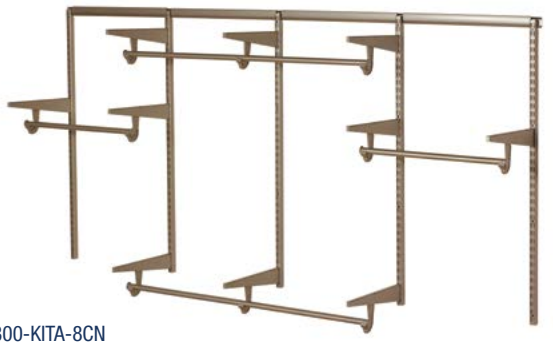

0300-KITA-8CN

ClosetCulture®
Strong. Flexible. Elegant.

Download at www.kv.com > Resource Library

Closet Planning

All closets are essentially custom projects, because individual storage needs differ. However, there are some elements that all closets have in common.

There are two basic types of closets: walk-in and reach-in. Walk-in closets typically are found in the master bedroom suite. They vary in size and shape depending on the home layout. Typical shapes of walk-ins include square, rectangle, square notch and L-shaped. Reach-in closets are typically found in children/guest bedrooms, or along hallways, and are rectangle-shaped.

Walk-In Closet

There are no standard dimensions for the walk-in closet, but there are general guidelines that are essential in planning a closet in this format. You will need a minimum of 2 feet of space for the closet door. Pocket doors are recommended to give the most unrestricted access to clothing. When planning overall dimensions, the minimal path through the closet should be approximately 30 inches. The overall width should be a minimum 6 feet, 6 inches to allow for hanging space on both walls.

It is helpful to think of the walk-in as a combination of reach-in closets. Measure each wall separately. Plan storage one wall at a time using corner shelving or hang rods to make the most of the space. If the closet is shared, plan one wall for each person with the back wall shared or used by the person who needs more space.

Reach-In Closet

Reach-in closets are typically long rectangles measuring 48 inches long and larger. A typical reach-in closet is approximately 6 feet long, 8 feet high, 24 inches deep with an 80 inch high door opening. Reach-in closets are very practical for a single occupant. They allow for easy viewing and access of all contents. Accessories and baskets work well in them.

For a reach-in closet with bi-fold doors, it's best to place a basket section in the center of the closet for maximum accessibility. For a closet with sliding doors, put the baskets on either end of the closet.

Walk-In Closet Dimensions

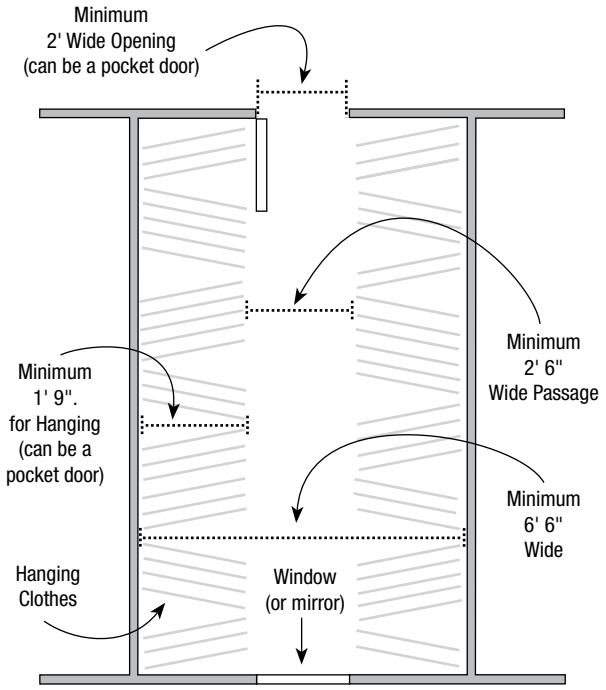

Single Pole

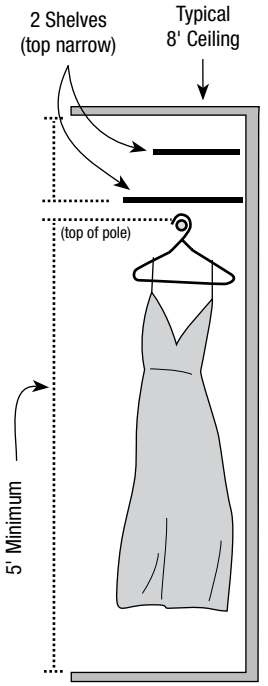

Double Pole

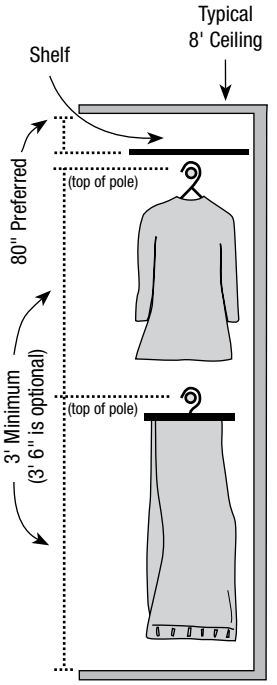

Closet Planning

Space Planning

Take inventory of what you will store in the closet area. The amount and types of clothing are essential information for proper planning. Below are general dimensions required by different types of clothing. Keep in mind that storage needs can change and flexibility is essential in designing a closet.

Women's

Dress ..... 68" long
Robe ..... 52" long
Jacket ..... 36" long
Blouse (on hanger) ..... 34" long
Blouse (folded) ..... 10" wide, 13" long
Skirt ..... 36" long
Shoes ..... 6" wide, 9-1/2" long
Sweater (folded) ..... 10" wide, 14" long

Men's

Suit Coats ..... 12" wide, 38" long
Shirts (six on hangers) ..... 12" wide, 38" long
Shirt (folded) ..... 8" wide, 14" long
Pants (straight on hanger) .... 44" long
Pants (folded on hanger) ..... 27" long
Dress Hat ..... 6" x 11"
Shoes ..... 9" wide, 12" long
Boots ..... 9" wide, 12" long

Hanging Items

Short hanging items, such as skirts, blouses and folded pants, require rods attached 30 to 40 inches from the floor. A typical closet can include two levels of hanging rods. As a rule, place the top rod 80 to 82 inches up from the floor, the bottom rod about 40 inches up.

For a single rod application, plan 60 inches from the floor for placement. You will need at least 1 foot, 9 inches (24 inches is standard) away from the back wall for hanging. When spanning an opening of more than 48 inches, consider adding a center support to the closet rod for added stability. The same general rules apply to kids' closets. For young children who don't have a lot of hanging items, plan on one rod at 36 to 40 inches off the floor. This allows youngsters to reach their clothes.

Helpful Hints

- Maximize space. Few people own many items that require a 64 inch high rod. Dedicate a smaller space between 1 foot and 2 feet for these items. All other clothing can be hung in a double-rod application, thereby allowing more in a smaller space.
- Design for visibility. Plan the closet so socks, ties and underwear can be viewed when dressing.
- Beware of cedar. Cedar closets do keep moths away, but the cedar scent can permeate adjacent spaces. Plan for a cedar closet in the basement or with an extra door.
- Think about lighting. You need to be able to see clothes to make decisions when getting dressed. Overhead natural light is preferred but if it is not available, good fluorescent lighting is often the only code-compliant solution.
- Use the vertical dimension. Take advantage of all available space, up to the ceiling and down to the floor. Bins on high shelves, roll-out boxes that sit on the floor, even a third pull-down closet rod if your ceiling is over 9 feet, are ideal for storing items that aren't frequently used.

Waste & Recycling

Waste & Recycling Solutions 146
Heavy-Duty, Soft-Close, Wood Undermount Waste & Recycling Bins . 147
Heavy-Duty, Soft-Close, Undermount Waste & Recycling Bins. 148
Soft-Close, Top-MountWaste & Recycling Bins. 149
Soft-Close, Bottom-MountWaste & Recycling Bins 150
Standard, Top-MountWaste & Recycling Bins. 151
Standard, Bottom-MountWaste & Recycling Bins 152
Two-Way Pull-OutWaste & Recycling Bins 153
Door Mount Bracket Kits 154
Corner Recycling Centers 155
Door-Mounted Waste Bin 155
Replacement Bins & Lids 156
Cabinet Dimensions 157

Waste & Recycling Solutions

A complete offering with a total of seven product series, including four different levels of Soft-Close options. Each product has been designed to maximize usable cabinet interior and opening space, where two bins can often be used instead of only one. Multiple finish and size options fit all common cabinet opening sizes, making this one of the most extensive Waste & Recycling programs available today.

Soft-Close Technology

Soft-Close slides now come standard on four KV Waste & Recycling series products, making the world a quieter place by eliminating slamming and providing full closure every time.

Concealed Slide Hardware

Product designs conceal slide hardware on all KV Soft-Close Waste & Recycling products, creating a smooth, neutral look that is also easy to clean.

Bins & Lids

Bin styling is a welcome update to the industry-standard "boxy" look, plus it integrates effortlessly with hardware system for a secure fit. Optional lids conceal bin contents and hold plastic bags securely in place, now available for any 20 qt. or 35 qt. product.

A Better Fit All Around

Features make installation faster and easier while also allowing individual products to be applied to a wider range of applications, door sizes and openings, creating a better fit all around.

Download at www.kv.com > Resource Library

Heavy-Duty, Soft-Close, Wood Undermount Waste & Recycling Bins

- Heavy-duty, undermount slide with Soft-Close technology and concealed hardware; 100 lb. dynamic / 125 lb. static
- Wood drawer box captures bin and provides a clean neutral look
- Single bin units include a storage space for trash bags or cleaning products
- Installs in minutes using self-aligning brackets secured with only six screws
- Unique, easy to clean, solid floor that prevents debris from falling through to the floor or inside cabinet
- Optional lids for 29 qt. waste bins available

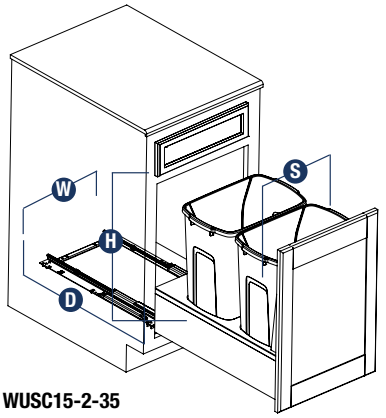

WUSC15-2-35

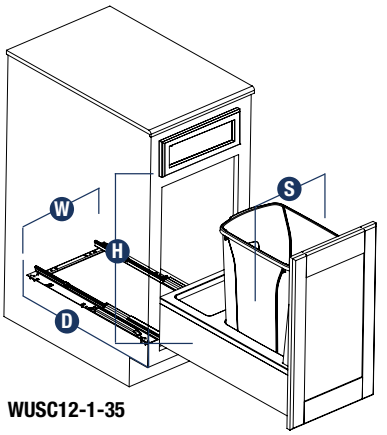

WUSC12-1-35

Stock #	Sliding Assembly Width (S)	Assembled Product Dimensions Width (W)	Height* (H)	Depth (D)	Finish	Capacity per Bin	Number of Bins	Units per Carton	Weight per Carton
SINGLE BIN UNITS									
WUSC12-1-35WH	11-1/4" [286 mm]	11-1/4" [286 mm]	19-1/4" [489 mm]	22-3/8" [568 mm]	White	29 qt.	1	1	19.7 lbs. [8.9 kg.]
WUSC12-1-35PT	11-1/4" [286 mm]	11-1/4" [286 mm]	19-1/4" [489 mm]	22-3/8" [568 mm]	Platinum	29 qt.	1	1	19.7 lbs. [8.9 kg.]
WUSC12-1-50WH	11-1/4" [286 mm]	11-1/4" [286 mm]	23-5/16" [592 mm]	22-3/8" [568 mm]	White	50 qt.	1	1	19.7 lbs. [8.9 kg.]
WUSC12-1-50PT	11-1/4" [286 mm]	11-1/4" [286 mm]	23-5/16" [592 mm]	22-3/8" [568 mm]	Platinum	50 qt.	1	1	19.7 lbs. [8.9 kg.]
DOUBLE BIN UNITS									
WUSC12-2-27WH	11-1/4" [286 mm]	11-5/8" [286 mm]	19-5/8" [498 mm]	22-3/8" [568 mm]	White	27 qt.	2	1	20.9 lbs. [9.5 kg.]
WUSC12-2-27PT	11-1/4" [286 mm]	11-5/8" [286 mm]	19-5/8" [498 mm]	22-3/8" [568 mm]	Platinum	27 qt.	2	1	20.9 lbs. [9.5 kg.]
WUSC15-2-35WH	14-1/4" [362 mm]	14-5/8" [300 mm]	19-1/4" [489 mm]	22-3/8" [568 mm]	White	29 qt.	2	1	23.5 lbs. [10.7 kg.]
WUSC15-2-35PT	14-1/4" [362 mm]	14-5/8" [300 mm]	19-1/4" [489 mm]	22-3/8" [568 mm]	Platinum	29 qt.	2	1	23.5 lbs. [10.7 kg.]
WUSC18-2-50WH	16-7/8" [429 mm]	16-7/8" [429 mm]	23-1/32" [592 mm]	22-7/16" [570 mm]	White	50 qt.	2	1	24 lbs. [10.9 kg.]
WUSC18-2-50PT	16-7/8" [429 mm]	16-7/8" [429 mm]	23-1/32" [592 mm]	22-7/16" [570 mm]	Platinum	50 qt.	2	1	24 lbs. [10.9 kg.]

* If using lid, add 3/4". 30 lbs. maximum per bin, not to exceed 80 lbs. total weight. Not intended for bulk storage.

USC15-2-35PT
(with custom rail accents)

Heavy-Duty, Soft-Close, Undermount Waste & Recycling Bins

- Heavy-duty, undermount slide with Soft-Close technology; 100 lb. dynamic / 125 lb. static
- Installs in minutes using self-aligning brackets secured with only six screws
- Color coordinated aluminum side rails provide stability and conceal slide hardware
- Unique, easy to clean, solid backsplash and floor that prevents debris from falling through to floor or into cabinet
- Decorative rail accents can be customized to match countertops or cabinetry
- Optional lids for 29 qt. waste bins available

USC12-1-35WH
(with optional QT35LB-W lid)

Door-Mount Bracket

- Fits standard width opening up to door sizes 3" wider
- Simple, concealed two-screw door leveling
- Slotted screw holes allow for easy door centering
- Accommodates overlay or inset doors

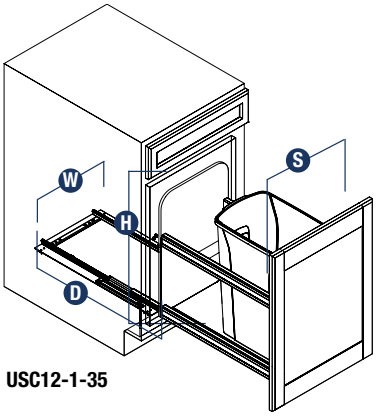

USC12-1-35

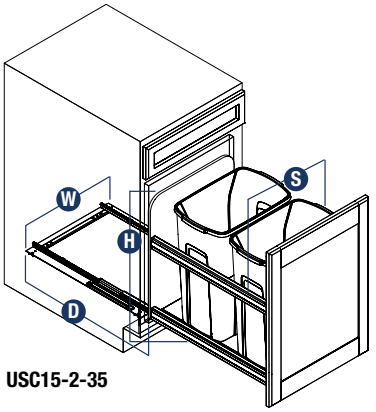

USC15-2-35

Stock #	Sliding Assembly Width (S)	Assembled Product Dimensions Width (W)	Height* (H)	Depth (D)	Finish	Capacity per Bin	Number of Bins	Units per Carton	Weight per Carton
SINGLE BIN UNITS									
USC12-1-35WH	11-13/16" [299 mm]	11-13/16" [299 mm]	19-3/16" [487 mm]	22-7/16" [570 mm]	White	29 qt.	1	1	19.7 lbs. [8.9 kg.]
USC12-1-35PT	11-13/16" [299 mm]	11-13/16" [299 mm]	19-3/16" [487 mm]	22-7/16" [570 mm]	Platinum	29 qt.	1	1	19.7 lbs. [8.9 kg.]
USC12-1-50WH	11-13/16" [299 mm]	11-13/16" [299 mm]	23-1/4" [591 mm]	22-7/16" [570 mm]	White	50 qt.	1	1	22.1 lbs. [10 kg.]
USC12-1-50PT	11-13/16" [299 mm]	11-13/16" [299 mm]	23-1/4" [591 mm]	22-7/16" [570 mm]	Platinum	50 qt.	1	1	22.1 lbs. [10 kg.]
DOUBLE BIN UNITS									
USC12-2-27WH	11-13/16" [300 mm]	11-13/16" [300 mm]	19-1/2" [496 mm]	22-7/16" [570 mm]	White	27 qt.	2	1	20.9 lbs. [9.5 kg.]
USC12-2-27PT	11-13/16" [300 mm]	11-13/16" [300 mm]	19-1/2" [496 mm]	22-7/16" [570 mm]	Platinum	27 qt.	2	1	20.9 lbs. [9.5 kg.]
USC15-2-35WH	14-13/16" [376 mm]	14-13/16" [376 mm]	19-3/16" [487 mm]	22-7/16" [570 mm]	White	29 qt.	2	1	23.5 lbs. [10.7 kg.]
USC15-2-35PT	14-13/16" [376 mm]	14-13/16" [376 mm]	19-3/16" [487 mm]	22-7/16" [570 mm]	Platinum	29 qt.	2	1	23.5 lbs. [10.7 kg.]
USC18-2-50WH	14-13/16" [376 mm]	15-3/8" [391mm]	23-1/4" [592mm]	22-7/16" [570 mm]	White	50 qt.	2	1	24 lbs. [10.9 kg.]
USC18-2-50PT	14-13/16" [376 mm]	15-3/8" [391mm]	23-1/4" [592mm]	22-7/16" [570 mm]	Platinum	50 qt.	2	1	24 lbs. [10.9 kg.]

* If using lid, add 3/4". 30 lbs. maximum per bin, not to exceed 80 lbs. total weight. Not intended for bulk storage.

TSC12-1-35WH
(with optional QT35LB-W lid)

Soft-Close, Top-Mount Waste & Recycling Bins

- KV medium-duty, full-extension ball-bearing slides with Soft-Close technology and 1" over-travel
- Door-mount brackets include six-way adjustability for precise door alignment and easy installation
- Bins fit securely into multi-ply birch veneered plywood with soft radius edges
- Single-bin units feature a heavy-duty epoxy-coated wire accessory basket
- Color coordinated steel decorative slide hardware covers provide strength and stability while concealing slide hardware, creating a streamlined, easy-to-clean design
- Optional lids available

TSC15-2-35PT

Unique KV Face Frame Adapter Mounting Hardware accommodates 1-3/4" face frame cabinets by allowing for installation in openings 1/2" smaller than standard sizes (excluding TSC15-2-35PT and TSC15-2-35WH).

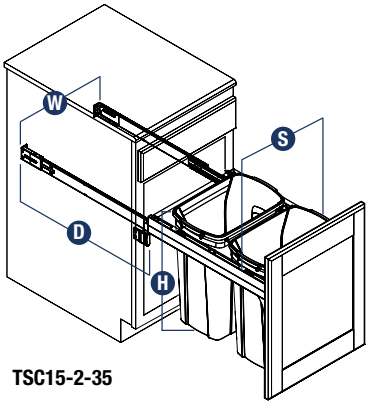

TSC15-2-35

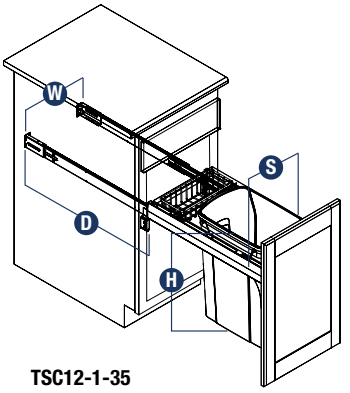

TSC12-1-35

Stock #	Sliding Assembly Width S	Assembled Product Dimensions Width W	Height* H	Depth D	Finish	Capacity per Bin	Number of Bins	Units per Carton	Weight per Carton
SINGLE BIN UNITS									
TSC12-1-35WH	11-5/16" [287 mm]	11-1/2" [292 mm]	17-1/2" [445 mm]	23-3/16" [589 mm]	White	29 qt.	1	1	13.9 lbs. [6.3 kg.]
TSC12-1-35PT	11-5/16" [287 mm]	11-1/2" [292 mm]	17-1/2" [445 mm]	23-3/16" [589 mm]	Platinum	29 qt.	1	1	13.9 lbs. [6.3 kg.]
TSC15-1-35WH	14-5/16" [364 mm]	14-1/2" [368 mm]	17-1/2" [445 mm]	23-3/16" [589 mm]	White	29 qt.	1	1	14.7 lbs. [6.7 kg.]
TSC15-1-35PT	14-5/16" [364 mm]	14-1/2" [368 mm]	17-1/2" [445 mm]	23-3/16" [589 mm]	Platinum	29 qt.	1	1	14.7 lbs. [6.7 kg.]
TSC15-1-50WH	14-5/16" [364 mm]	14-1/2" [368 mm]	21-5/8" [549 mm]	23-3/16" [589 mm]	White	50 qt.	1	1	15.7 lbs. [7.1 kg.]
TSC15-1-50PT	14-5/16" [364 mm]	14-1/2" [368 mm]	21-5/8" [549 mm]	23-3/16" [589 mm]	Platinum	50 qt.	1	1	15.7 lbs. [7.1 kg.]
DOUBLE BIN UNITS									
TSC15-2-35WH	14-13/16" [376 mm]	15" [381 mm]	17-1/2" [445 mm]	23-3/16" [589 mm]	White	29 qt.	2	1	14.9 lbs. [6.8 kg.]
TSC15-2-35PT	14-13/16" [376 mm]	15" [381 mm]	17-1/2" [445 mm]	23-3/16" [589 mm]	Platinum	29 qt.	2	1	14.9 lbs. [6.8 kg.]
TSC18-2-35WH	17-5/16" [440 mm]	17-1/2" [445 mm]	17-1/2" [445 mm]	23-3/16" [589 mm]	White	29 qt.	2	1	15.6 lbs. [7.1 kg.]
TSC18-2-35PT	17-5/16" [440 mm]	17-1/2" [445 mm]	17-1/2" [445 mm]	23-3/16" [589 mm]	Platinum	29 qt.	2	1	15.6 lbs. [7.1 kg.]

* If using lid, add 3/4". 30 lbs. maximum per bin, not to exceed 80 lbs. total weight. Not intended for bulk storage.

SCB15-2-35WH
(with optional PDMKTPT Door Bracket Kit)

SP-BSC12-2-27-P

Soft-Close, Bottom-Mount Waste & Recycling Bins

(door-mount optional)

- KV medium-duty, full-extension ball-bearing slides with Soft-Close technology and 1" over-travel
- Clip-On Handle
- Easy installation with only four screws into heavy-duty mounting straps
- Optional Door-Mount Bracket available
- Specialized wire management systems hold Bins securely in place
- Bottom-mount units provide stability and are pre-assembled, for faster installation
- Optional lids available

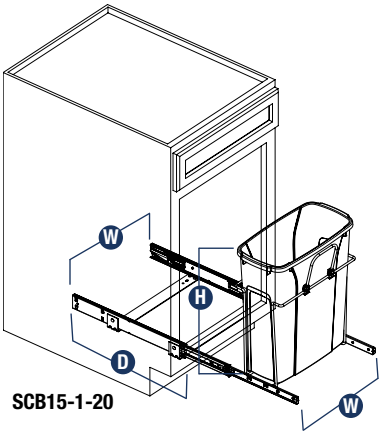

SCB15-1-20

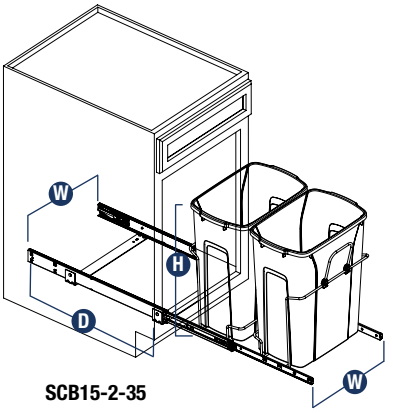

SCB15-2-35

Stock #	Sliding Assembly Width (S)	Assembled Product Dimensions Width (W)	Height* (H)	Depth (D)	Finish	Capacity per Bin	Number of Bins	Units per Carton	Weight per Carton
simplyput thoughtfully organized — **SINGLE BIN UNITS (FULL COLOR RETAIL PACKAGING)**									
SP-BSC10-1-35-P	9-11/16" [246 mm]	9-11/16" [246 mm]	20" [508 mm]	20" [508 mm]	Frosted Nickel/Platinum	29 qt.	1	1	9.0 lbs. [4.1 kg]
SP-BSC12-2-27-P	11" [279 mm]	11" [279 mm]	18-3/4" [476 mm]	22" [559 mm]	Frosted Nickel/Platinum	27 qt.	2	1	11.5 lbs. [5.2 kg]
SP-BSC15-2-35-P	14-15/16" [379 mm]	14-15/16" [379 mm]	18-3/4" [476 mm]	22" [559 mm]	Frosted Nickel/Platinum	29 qt.	2	1	13.0 lbs. [5.9 kg]
KV SINGLE BIN UNITS									
SCB9-1-20PT	8-3/8" [218 mm]	8-3/8" [213 mm]	17-5/16" [440 mm]	20-1/8" [511 mm]	Frosted Nickel/Platinum	20 qt.	1	1	11.5 lbs. [5.2 kg.]
SCB9-1-20WH	8-3/8" [218 mm]	8-3/8" [213 mm]	17-5/16" [440 mm]	20-1/8" [511 mm]	White/White	20 qt.	1	1	11.5 lbs. [5.2 kg.]
SCB10-1-35PT	9-5/8" [244 mm]	9-5/8" [244 mm]	18-13/16" [478 mm]	20-1/8" [511 mm]	Frosted Nickel/Platinum	29 qt.	1	1	10.5 lbs. [4.8 kg.]
SCB10-1-35WH	9-5/8" [244 mm]	9-5/8" [244 mm]	18-13/16" [478 mm]	20-1/8" [511 mm]	White/White	29 qt.	1	1	10.5 lbs. [4.8 kg.]
SCB12-1-50PT	11-3/8" [299 mm]	11-3/8" [299 mm]	22-7/8" [581 mm]	20-1/8" [511 mm]	Frosted Nickel/Platinum	50 qt.	1	1	11.5 lbs. [5.2 kg.]
SCB12-1-50WH	11-3/8" [299 mm]	11-3/8" [299 mm]	22-7/8" [581 mm]	20-1/8" [511 mm]	White/White	50 qt.	1	1	11.5 lbs. [5.2 kg.]
SCB15-1-20PT	14-3/8" [365 mm]	14-3/8" [365 mm]	17-5/16" [440 mm]	16" [406 mm]	Frosted Nickel/Platinum	20 qt.	1	1	10.7 lbs. [4.9 kg.]
SCB15-1-20WH	14-3/8" [365 mm]	14-3/8" [365 mm]	17-5/16" [440 mm]	16" [406 mm]	White/White	20 qt.	1	1	10.7 lbs. [4.9 kg.]
KV DOUBLE BIN UNITS									
SCB12-2-27WH	11" [279 mm]	11-3/8" [299 mm]	18-3/4" [476 mm]	22" [558 mm]	White/White	27 qt.	2	1	14.0 lbs. [6.4 kg.]
SCB12-2-27PT	11" [279 mm]	11-3/8" [299 mm]	18-3/4" [476 mm]	22" [558 mm]	Frosted Nickel/Platinum	27 qt.	2	1	14.0 lbs. [6.4 kg.]
SCB15-2-20PT	14-3/8" [365 mm]	14-3/8" [365 mm]	17-5/16" [440 mm]	20-1/8" [511 mm]	Frosted Nickel/Platinum	20 qt.	2	1	18.1 lbs. [8.2 kg.]
SCB15-2-20WH	14-3/8" [365 mm]	14-3/8" [365 mm]	17-5/16" [440 mm]	20-1/8" [511 mm]	White/White	20 qt.	2	1	18.1 lbs. [8.2 kg.]
SCB15-2-35PT	14-3/8" [365 mm]	14-3/8" [365 mm]	18-13/16" [478 mm]	22" [558 mm]	Frosted Nickel/Platinum	29 qt.	2	1	19.7 lbs. [8.9 kg.]
SCB15-2-35WH	14-3/8" [365 mm]	14-3/8" [365 mm]	18-13/16" [478 mm]	22" [558 mm]	White/White	29 qt.	2	1	19.7 lbs. [8.9 kg.]

* If using lid, add 3/4". 30 lbs. maximum per bin, not to exceed 80 lbs. total weight. Not intended for bulk storage.

PDMTM12-1-35WH
(with optional QT35LB-W lid)

Standard, Top-Mount Waste & Recycling Bins

- White polymer removable Bins slide out on KV heavy-duty, precision ball-bearing slides
- Door-Mount Brackets include six-way adjustability for precise door alignment and easy installation
- Made of multi-ply birch veneered plywood with soft radius edges for safety and comfort
- Single-bin units feature a heavy-duty, epoxy-coated wire accessory basket
- Optional lids available

PDMTM15-2-35WH

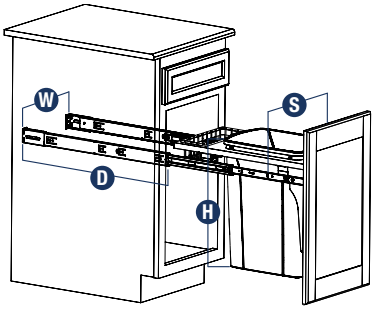

PDMTM12-1-35WH

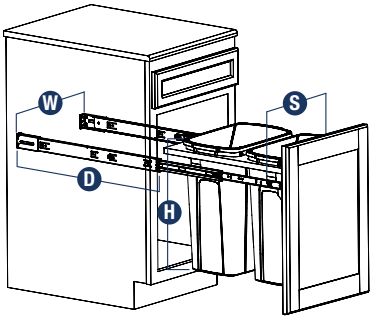

PDMTM15-2-35WH

Stock #	Sliding Assembly Width (S)	Assembled Product Dimensions Width (W)	Height* (H)	Depth (D)	Finish	Capacity per Bin	Number of Bins	Units per Carton	Weight per Carton
SINGLE BIN UNITS									
PDMTM115-1-35WH	10-15/16" [278 mm]	11-1/2" [292 mm]	17-1/2" [445 mm]	22-1/2" [572 mm]	Anochrome/White	29 qt.	1	1	12.6 lbs. [5.7 kg.]
PDMTM12-1-35WH	11-7/16" [291 mm]	12" [305 mm]	17-1/2" [445 mm]	22-1/2" [572 mm]	Anochrome/White	29 qt.	1	1	13.1 lbs. [5.9 kg.]
PDMTM145-1-50WH	13-15/16" [354 mm]	14-1/2" [368 mm]	21-5/8" [549 mm]	22-1/2" [572 mm]	Anochrome/White	50 qt.	1	1	14.5 lbs. [6.6 kg.]
DOUBLE BIN UNITS									
PDMTM15-2-35WH	14-7/16" [367 mm]	15" [381 mm]	17-1/2" [445 mm]	22-1/2" [572 mm]	Anochrome/White	29 qt.	2	1	14.2 lbs. [6.4 kg.]
PDMTM175-2-35WH	16-15/16" [430 mm]	17-1/2" [445 mm]	17-1/2" [445 mm]	22-1/2" [572 mm]	Anochrome/White	29 qt.	2	1	15.7 lbs. [7.1 kg.]
PDMTM18-2-35WH	17-7/16" [443 mm]	18" [457 mm]	17-1/2" [445 mm]	22-1/2" [572 mm]	Anochrome/White	29 qt.	2	1	15.9 lbs. [7.2 kg.]
PDMTM21-2-35WH	20-7/16" [519 mm]	21" [533 mm]	17-1/2" [445 mm]	22-1/2" [572 mm]	Anochrome/White	29 qt.	2	1	16.5 lbs. [7.5 kg.]

* If using lid, add 3/4". 30 lbs. maximum per bin, not to exceed 80 lbs. total weight. Not intended for bulk storage.

Standard, Bottom-Mount Waste & Recycling Bins

(door-mount optional)

- KV medium-duty ball-bearing precision slides
- Updated wire management system holds bins securely in place
- Pre-assembled units with heavy-duty mounting straps install easily with only four screws
- Clip-on handle comes single and double-bin units
- Optional Door-Mount Bracket available
- Optional lids available for 20 qt. and 29 qt. waste bins

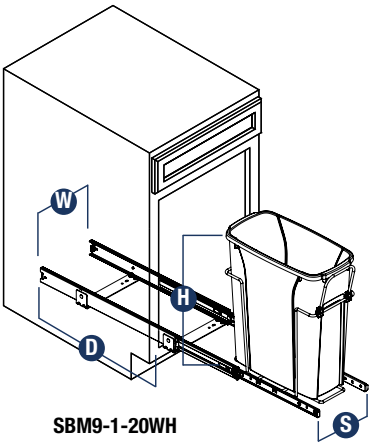

SBM9-1-20WH

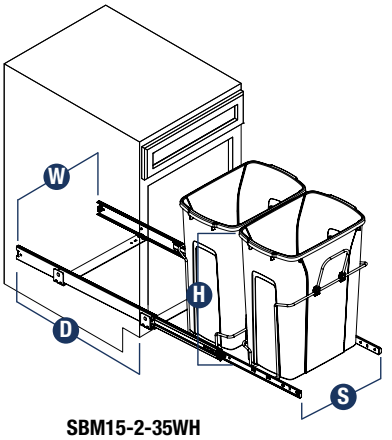

SBM15-2-35WH

Stock #	Sliding Assembly Width (S)	Assembled Product Dimensions: Width (W)	Height* (H)	Depth (D)	Finish	Capacity per Bin	Number of Bins	Units per Carton	Weight per Carton
SINGLE BIN UNITS									
SBM9-1-20WH	8" [203 mm]	8" [203 mm]	17-5/16" [440 mm]	20-1/8" [511 mm]	White	20 qt.	1	1	10.3 lbs. [4.7 kg.]
SBM10-1-35WH	9-5/8" [244 mm]	9-5/8" [244 mm]	18-13/16" [478 mm]	20-1/8" [511 mm]	White	29 qt.	1	1	9.4 lbs. [4.3 kg.]
SBM12-1-50WH	11-3/8" [289 mm]	11-3/8" [289 mm]	22-7/8" [581 mm]	20-1/8" [511 mm]	White	50 qt.	1	1	10.5 lbs. [4.8 kg.]
SBM15-1-35WH	14-3/8" [365 mm]	14-3/8" [365 mm]	18-3/4" [478 mm]	16" [406 mm]	White	29 qt.	1	1	14.6 lbs. [6.6 kg.]
DOUBLE BIN UNITS									
SBM12-2-27WH	11-3/8" [289 mm]	11-3/8" [289 mm]	18-3/4" [476 mm]	22" [558 mm]	White	27 qt.	2	1	12.9 lbs. [5.9 kg.]
SBM15-2-20WH	14-3/8" [365 mm]	14-3/8" [365 mm]	17-5/16" [440 mm]	20-1/8" [511 mm]	White	20 qt.	2	1	16.8 lbs. [7.6 kg.]
SBM15-2-35WH	14-3/8" [365 mm]	14-3/8" [365 mm]	18-13/16" [478 mm]	22" [558 mm]	White	29 qt.	2	1	18.3 lbs [8.3 kg.]

* If using lid, add 3/4". 30 lbs. maximum per bin, not to exceed 80 lbs. total weight. Not intended for bulk storage.

Download at www.kv.com > Resource Library

Two-Way Pull-Out Waste & Recycling Bins

- Mounting options fit both narrow and wide opening cabinets: facilitating maximum depth usage or shallow depth installations to work around plumbing

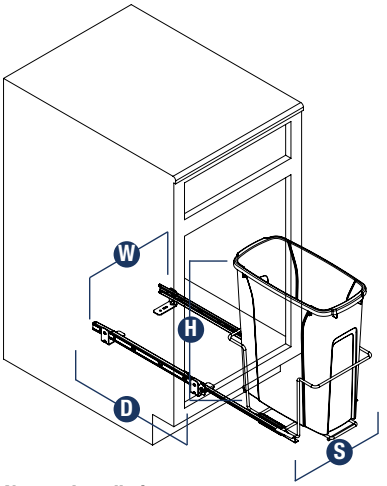

Narrow Installation

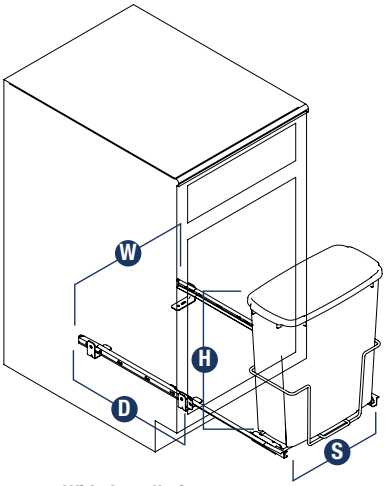

Wide Installation

Stock #	Assembly Installation	Sliding Assembly Width S	Assembled Product Dimensions: Width W	Height* H	Depth D	Finish	Capacity per Bin	Number of Bins	Units per Carton	Weight per Carton
simplyput thoughtfully organized — SINGLE BIN UNITS (FULL COLOR RETAIL PACKAGING)										
SP-ECW10-1-35-W	Narrow	9-7/8" [251 mm]	9-7/8" [251 mm]	18-15/16" [481 mm]	16" [406 mm]	White	29 qt.	1	1	7.0 lbs. [3.2 kg]
	Wide	14-1/4" [362 mm]	14-1/4" [362 mm]	18-15/16" [481 mm]	16" [406 mm]	White	29 qt.	1	1	7.0 lbs. [3.2 kg]

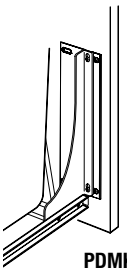

Door Mount Bracket Kits

- Easy installation into handle mounting holes with only four screws
- Six-way adjustability for alignment of cabinet door with easy "drop-in" keyhole attachment
- Adapts from standard width opening up to door sizes 3" wider
- Allows for application with most common cabinet door overlays
- Eliminates need for sub-panel support behind cabinet door

Stock #	Description	Finish	Units per Carton	Weight per Carton
simplyput thoughtfully organized	DOOR-MOUNT BRACKET KIT (FULL COLOR RETAIL PACKAGING)			
SP-DOORKIT-ANO*	–	Anochrome	1	2.6 lbs. [1.2 kg.]
KV	DOOR-MOUNT BRACKET KIT			
PDMKTPT*	–	Frosted Nickel	1	2.3 lbs. [1 kg.]

Note: Door-Mount Kit adds 3/8" to depth of Waste & Recycle unit.

*Instructions and hardware included with all kits.

Corner Recycling Centers

- Three removable white polymer 32 qt. bins rotate on 1" diameter post
- Designed to fit in 36" base corner cabinet

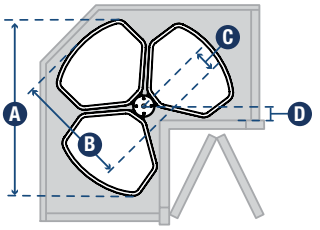

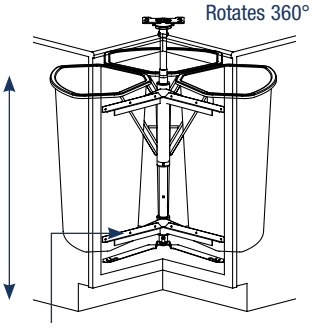

RRC28PT-W model includes hardware to mount to revolving cabinet door

Stock #	Assembled Product Dimensions: Diameter A	B	C	D	Post Height Range	Finish	Capacity per Bin	Number of Bins	Units per Carton	Weight per Carton
CORNER RECYCLING CENTER										
RRC28K-W	27-5/8" [702 mm]	18-5/16" [465 mm]	4-1/2" [114 mm]	3-3/16" [81 mm]	28-1/2" [724 mm] - 30-1/2" [775 mm]	Chrome/White	32 qt.	3	1	15.3 lbs. [6.9 kg.]

Cabinet Dimensions

Stock #	E	F	G	H	Z	Mounting
SINGLE BIN UNITS						
RRC28K-W	13-13/16" [351 mm]	18-1/2" [470 mm]	3-15/16" [100 mm]	9-7/8" [251 mm]	12-1/8" [308 mm]	Top/Bottom

E = Radius
F = Min. Cabinet Depth
G = Center of Rotation
H = Min. Cabinet Opening

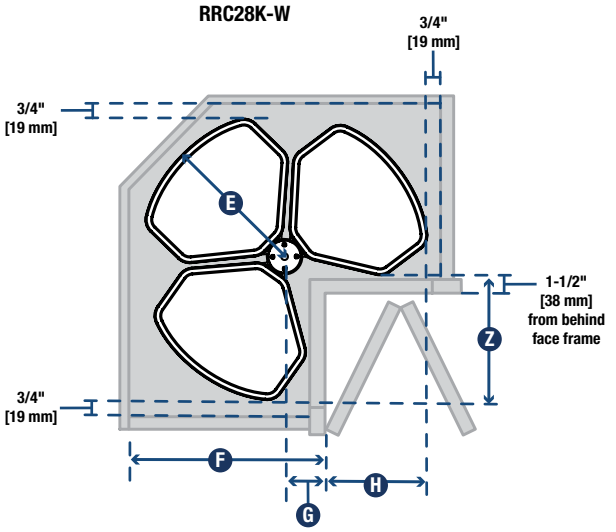

Door-Mounted Waste Bin

- White polymer removable bin mounts on White frame
- Perfect for kitchens and baths
- Installs with two screws

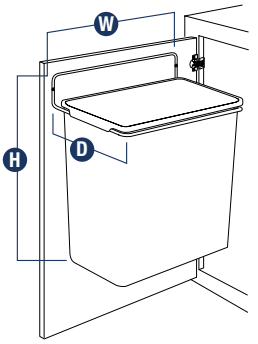

Stock #	Assembled Product Dimensions: Width W	Height* H	Depth D	Finish	Capacity per Bin	Number of Bins	Units per Carton	Weight per Carton
DOOR-MOUNTED WASTE BIN								
DWB975-W	9-1/2" [241 mm]	13-3/8" [340 mm]	7" [178 mm]	White/White	9 qt.	1	1	1.7 lbs. [0.8 kg.]

*Product dimensions include units in a fully-closed position, unless noted otherwise. **Height listed is when product is in an open position.

Replacement Bins & Lids

Stock #	Assembled Product Dimensions Width W	Height* H	Depth D	Finish	Description	Units per Carton	Weight per Carton
BINS							
QT20PB-WH	14-1/4" [362 mm]	16" [406 mm]	7-1/4" [184 mm]	White	20 qt.	6	12 lbs. [5.4 kg.]
QT20PB-PT	14-1/4" [362 mm]	16" [406 mm]	7-1/4" [184 mm]	Platinum	20 qt.	6	12 lbs. [5.4 kg.]
QT27PB-W	10-5/8" [270 mm]	17-3/4" [451 mm]	10-5/8" [270 mm]	White	27 qt.	10	17.4 lbs. [7.9 kg.]
QT27PB-PT	10-5/8" [270 mm]	17-3/4" [451 mm]	10-5/8" [270 mm]	Platinum	27 qt.	10	17.4 lbs. [7.9 kg.]
QT32PB-W	14" [356 mm]	20" [508 mm]	11-3/4" [298 mm]	White	32 qt.	1	4 lbs. [1.8 kg.]
QT35PB-WH	14-1/4" [362 mm]	17-1/2" [445 mm]	9-3/16" [233 mm]	White	29 qt.	6	14 lbs. [6.4 kg.]
QT35PB-PT	14-1/4" [362 mm]	17-1/2" [445 mm]	9-3/16" [233 mm]	Platinum	29 qt.	6	14 lbs. [6.4 kg.]
QT50PB-W	15-3/8" [391 mm]	21-3/8" [542 mm]	11-1/8" [283 mm]	White	50 qt.	8	20 lbs. [9.1 kg.]
QT50PB-P	15-3/8" [391 mm]	21-3/8" [542 mm]	11-1/8" [283 mm]	Platinum	50 qt.	8	20 lbs. [9.1 kg.]
LIDS							
QT20LB-WH	14-1/2" [368 mm]	*	7-7/16" [189 mm]	White	Fits 20 qt.	1	2 lbs. [0.9 kg.]
QT20LB-PT	14-1/2" [368 mm]	*	7-7/16" [189 mm]	Platinum	Fits 20 qt.	1	2 lbs. [0.9 kg.]
QT35LB-WH	14-1/2" [368 mm]	*	9-9/16" [243 mm]	White	Fits 35 qt.	1	2 lbs. [0.9 kg.]
QT35LB-PT	14-1/2" [368 mm]	*	9-9/16" [243 mm]	Platinum	Fits 35 qt.	1	2 lbs. [0.9 kg.]

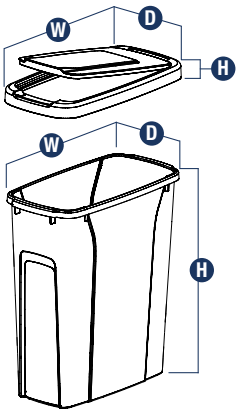

* Lid adds 3/4" to bin height.

Replacement Bin Chart

PRODUCT NUMBER	REPLACEMENT STOCK NUMEBR	PRODUCT NUMBER	REPLACEMENT STOCK NUMEBR	PRODUCT NUMBER	REPLACEMENT STOCK NUMEBR
SCB10-1-35WH	QT35PB-WH	PDMTM145-1-50WH	QT50PB-W	TSC15-1-35WH	QT35PB-WH
SCB10-1-35PT	QT35PB-PT	PDMTM15-2-35WH	QT35PB-WH	TSC15-1-35PT	QT35PB-PT
SCB12-1-50WH	QT50PB-W	PDMTM175-2-35WH	QT35PB-WH	TSC15-1-50WH	QT50PB-W
SCB12-1-50PT	QT50PB-P	PDMTM18-2-35WH	QT35PB-WH	TSC15-1-50PT	QT50PB-P
SCB12-2-27WH	QT27PB-W	PDMTM21-2-35WH	QT35PB-WH	TSC15-2-35WH	QT35PB-WH
SCB12-2-27PT	QT27PB-PT	SBM12-2-27WH	QT27PB-W	TSC15-2-35PT	QT35PB-PT
SCB15-1-20WH	QT20PB-WH	SBM10-1-35WH	QT35PB-WH	TSC18-2-35WH	QT35PB-WH
SCB15-1-20PT	QT20PB-PT	SBM12-1-50WH	QT50PB-W	TSC18-2-35PT	QT35PB-PT
SCB15-2-20WH	QT20PB-WH	SBM15-1-35WH	QT35PB-WH	USC12-1-35WH	QT35PB-WH
SCB15-2-20PT	QT20PB-PT	SBM15-2-20WH	QT20PB-WH	USC12-1-35PT	QT35PB-PT
SCB15-2-35WH	QT35PB-WH	SBM15-2-35WH	QT35PB-WH	USC12-1-50WH	QT50PB-W
SCB15-2-35PT	QT35PB-PT	SBM9-1-20WH	QT20PB-WH	USC12-1-50PT	QT50PB-PT
SCB9-1-20PT	QT20PB-PT	RRC28K-W	QT32PB-W	USC12-2-27WH	QT27PB-W
SCB9-1-20WH	QT20PB-WH	TSC12-1-35WH	QT35PB-WH	USC12-2-27PT	QT27PB-PT
PDMTM115-1-35WH	QT35PB-WH	TSC12-1-35PT	QT35PB-PT	USC15-2-35WH	QT35PB-WH
PDMTM12-1-35WH	QT35PB-WH			USC15-2-35PT	QT35PB-PT
				USC18-2-50WH	QT50PB-WH
				USC18-2-50PT	QT50PB-PT

QT20PB-WH (20 qt.)
(shown with QT20LB-W)

QT20PB-PT
(20 qt.)

QT27PB-PT
(27 qt.)

QT27PB-W
(27 qt.)

QT35PB-PT (29 qt.)
(shown with QT35LB-PT lid)

QT50PB-W
(50 qt.)

Download at www.kv.com > Resource Library

Cabinet Dimensions

	Min. Cabinet Dimensions		Min. Interior Cabinet Dimensions		Min. Cabinet Clearance	
Stock #	Width O	Width W	Height* H	Depth D	Front F	Back B
SINGLE BIN UNITS: NON-DOOR-MOUNT						
SCB9-1-20PT	9" [229 mm]	9" [229 mm]	17-13/16" [452 mm]	20-1/2" [521 mm]	1/4" [6 mm]	1/8" [3 mm]
SCB9-1-20WH	9" [229 mm]	9" [229 mm]	17-13/16" [452 mm]	20-1/2" [521 mm]	1/4" [6 mm]	1/8" [3 mm]
SCB10-1-35PT	10" [254 mm]	10" [254 mm]	19-5/16" [491 mm]	20-1/2" [521 mm]	1/4" [6 mm]	1/8" [3 mm]
SCB10-1-35WH	10" [254 mm]	10" [254 mm]	19-5/16" [491 mm]	20-1/2" [521 mm]	1/4" [6 mm]	1/8" [3 mm]
SCB12-1-50PT	12" [305 mm]	12" [305 mm]	23-3/8" [594 mm]	20-1/2" [521 mm]	1/4" [6 mm]	1/8" [3 mm]
SCB12-1-50WH	12" [305 mm]	12" [305 mm]	23-3/8" [594 mm]	20-1/2" [521 mm]	1/4" [6 mm]	1/8" [3 mm]
SCB15-1-20PT	15" [381 mm]	15" [381 mm]	17-13/16" [452 mm]	16" [407 mm]	1/4" [6 mm]	1/8" [3 mm]
SCB15-1-20WH	15" [381 mm]	15" [381 mm]	17-13/16" [452 mm]	16" [407 mm]	1/4" [6 mm]	1/8" [3 mm]
SBM9-1-20WH	9" [229 mm]	9" [229 mm]	17-13/16" [452 mm]	20-1/2" [521 mm]	1/4" [6 mm]	1/8" [3 mm]
SBM10-1-35WH	10" [254 mm]	10" [254 mm]	19-5/16" [491 mm]	20-1/2" [521 mm]	1/4" [6 mm]	1/8" [3 mm]
SBM12-1-50WH	12" [305 mm]	12" [305 mm]	23-3/8" [594 mm]	20-1/2" [521 mm]	1/4" [6 mm]	1/8" [3 mm]
SBM15-1-35WH	15" [381 mm]	15" [381 mm]	19-5/16" [491 mm]	16-3/8" [416 mm]	1/4" [6 mm]	1/8" [3 mm]
SINGLE BIN UNITS: DOOR-MOUNT (BOTTOM-MOUNT)						
DWB975-W	12" [305 mm]	12" [305 mm]	12-1/8" [308 mm]	7-1/2" [191 mm]	–	1/8" [3 mm]
WUSC12-1-35PT	11-3/4" [298 mm]	11-3/4" [298 mm]	19-1/2" [241 mm]	22-1/2" [597 mm]	–	1/8" [3 mm]
WUSC12-1-35WH	11-3/4" [298 mm]	11-3/4" [298 mm]	19-1/2" [241 mm]	22-1/2" [597 mm]	–	1/8" [3 mm]
WUSC12-1-50PT	11-3/4" [298 mm]	11-3/4" [298 mm]	23-1/2" [597 mm]	22-1/2" [597 mm]	–	1/8" [3 mm]
WUSC12-1-50WH	11-3/4" [298 mm]	11-3/4" [298 mm]	23-1/2" [597 mm]	22-1/2" [597 mm]	–	1/8" [3 mm]
USC12-1-35WH	12" [305 mm]	12" [305 mm]	19-3/16" [487 mm]	22-5/8" [575 mm]	–	1/8" [3 mm]
USC12-1-35PT	12" [305 mm]	12" [305 mm]	19-3/16" [487 mm]	22-5/8" [575 mm]	–	1/8" [3 mm]
USC12-1-50WH	12" [305 mm]	12" [305 mm]	23-5/16" [592 mm]	22-5/8" [575 mm]	–	1/8" [3 mm]
USC12-1-50PT	12" [305 mm]	12" [305 mm]	23-5/16" [592 mm]	22-5/8" [575 mm]	–	1/8" [3 mm]
SINGLE BIN UNITS: DOOR-MOUNT (TOP-MOUNT)						
PDMTM15-1-35WH	11-1/2" [292 mm]	11-1/2" [292 mm]	18" [457 mm]	22-1/2" [572 mm]	–	1/8" [3 mm]
PDMTM12-1-35WH	12" [305 mm]	12" [305 mm]	18" [457 mm]	22-1/2" [572 mm]	–	1/8" [3 mm]
PDMTM145-1-50WH	14-1/2" [368 mm]	14-1/2" [368 mm]	22-1/8" [562 mm]	22-1/2" [572 mm]	–	1/8" [3 mm]
TSC12-1-35WH	11-1/2" [292 mm]	11-1/2" [292 mm]	18" [457 mm]	23-3/8" [594 mm]	–	1/8" [3 mm]
TSC12-1-35PT	11-1/2" [292 mm]	11-1/2" [292 mm]	18" [457 mm]	23-3/8" [594 mm]	–	1/8" [3 mm]
TSC15-1-35WH	14-1/2" [368 mm]	14-1/2" [368 mm]	18" [457 mm]	23-3/8" [594 mm]	–	1/8" [3 mm]
TSC15-1-35PT	14-1/2" [368 mm]	14-1/2" [368 mm]	18" [457 mm]	23-3/8" [594 mm]	–	1/8" [3 mm]
TSC15-1-50WH	14-1/2" [368 mm]	14-1/2" [368 mm]	22-1/8" [562 mm]	23-3/8" [594 mm]	–	1/8" [3 mm]
TSC15-1-50PT	14-1/2" [368 mm]	14-1/2" [368 mm]	22-1/8" [562 mm]	23-3/8" [594 mm]	–	1/8" [3 mm]

Example of Face Frame Cabinet Application

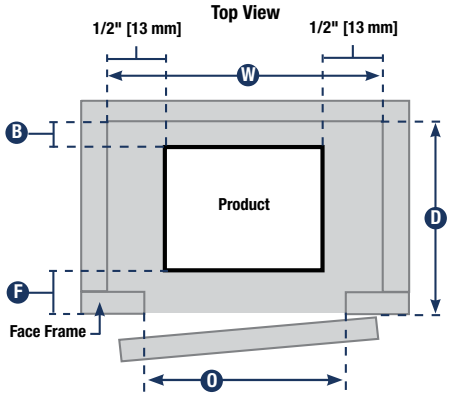

Dimensions shown are recommended minimum cabinet dimensions and clearances.

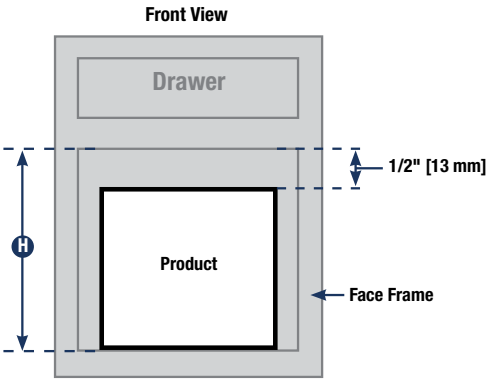

Cabinet Dimensions

	Min. Cabinet Dimensions	Min. Interior Cabinet Dimensions			Min. Cabinet Clearance	
Stock #	Width O	Width W	Height* H	Depth D	Front F	Back B
DOUBLE BIN UNITS: NON-DOOR-MOUNT						
SCB12-2-27PT	12" [305 mm]	12" [305 mm]	19" [482 mm]	22-9/16 [573 mm]	–	1/8" [3 mm]
SCB12-2-27WH	12" [305 mm]	12" [305 mm]	19" [482 mm]	22-9/16 [573 mm]	1/4" [6 mm]	1/8" [3 mm]
SCB15-2-20PT	15" [381 mm]	15" [381 mm]	17-13/16" [452 mm]	20-3/8" [518 mm]	1/4" [6 mm]	1/8" [3 mm]
SCB15-2-20WH	15" [381 mm]	15" [381 mm]	17-13/16" [452 mm]	20-3/8" [518 mm]	1/4" [6 mm]	1/8" [3 mm]
SCB15-2-35PT	15" [381 mm]	15" [381 mm]	19-5/16" [491 mm]	23-3/8" [594 mm]	1/4" [6 mm]	1/8" [3 mm]
SCB15-2-35WH	15" [381 mm]	15" [381 mm]	19-5/16" [491 mm]	23-3/8" [594 mm]	1/4" [6 mm]	1/8" [3 mm]
SBM12-2-27WH	12" [305 mm]	12" [305 mm]	19" [482 mm]	22-9/16" [573 mm]	1/4" [6 mm]	1/8" [3 mm]
SBM15-2-20WH	15" [381 mm]	15" [381 mm]	17-13/16" [452 mm]	20-3/8" [518 mm]	1/4" [6 mm]	1/8" [3 mm]
SBM15-2-35WH	15" [381 mm]	15" [381 mm]	19-5/16" [491 mm]	22-3/8" [568 mm]	1/4" [6 mm]	1/8" [3 mm]
DOUBLE BIN UNITS: DOOR-MOUNT (BOTTOM-MOUNT)						
WUSC12-2-27PT	11-1/2" [292 mm]	11-3/4" [298 mm]	19-3/4" [502 mm]	22-1/2" [597 mm]	–	1/8" [3 mm]
WUSC12-2-27WH	11-1/2" [292 mm]	11-3/4" [298 mm]	19-3/4" [502 mm]	22-1/2" [597 mm]	–	1/8" [3 mm]
WUSC15-2-35PT	14-1/2" [368 mm]	14-3/4" [375 mm]	19-1/2" [502 mm]	22-1/2" [597 mm]	–	1/8" [3 mm]
WUSC15-2-35WH	14-1/2" [368 mm]	14-3/4" [375 mm]	19-1/2" [502 mm]	22-1/2" [597 mm]	–	1/8" [3 mm]
WUSC18-2-50PT	17" [432 mm]	17" [432 mm]	23-1/4" [591 mm]	22-9/16" [573 mm]	–	1/8" [3 mm]
WUSC18-2-50WH	17" [432 mm]	17" [432 mm]	23-1/4" [591 mm]	22-9/16" [573 mm]	–	1/8" [3 mm]
USC12-2-27PT	12" [305 mm]	12" [305 mm]	19-1/4" [489 mm]	22-9/16" [573 mm]	–	1/8" [3 mm]
USC12-2-27WH	12" [305 mm]	12" [305 mm]	19-1/4" [489 mm]	22-9/16" [573 mm]	–	1/8" [3 mm]
USC15-2-35WH	15" [381 mm]	15" [381 mm]	19-3/16" [487 mm]	22-5/8" [575 mm]	–	1/8" [3 mm]
USC15-2-35PT	15" [381 mm]	15" [381 mm]	19-3/16" [487 mm]	22-5/8" [575 mm]	–	1/8" [3 mm]
USC18-2-50WH	16" [406 mm]	15-5/8" [397 mm]	23-5/16" [592 mm]	22-5/8" [575 mm]	–	1/8" [3 mm]
USC18-2-50PT	16" [406 mm]	15-5/8" [397 mm]	23-5/16" [592 mm]	22-5/8" [575 mm]	–	1/8" [3 mm]
DOUBLE BIN UNITS: DOOR-MOUNT (TOP-MOUNT)						
PDMTM15-2-35WH	15" [381 mm]	15" [381 mm]	18" [457 mm]	22-1/2" [572 mm]	–	1/8" [3 mm]
PDMTM175-2-35WH	17-1/2" [445 mm]	17-1/2" [445 mm]	18" [457 mm]	22-1/2" [572 mm]	–	1/8" [3 mm]
PDMTM18-2-35WH	18" [457 mm]	18" [457 mm]	18" [457 mm]	22-1/2" [572 mm]	–	1/8" [3 mm]
PDMTM21-2-35WH	21" [533 mm]	21" [533 mm]	18" [457 mm]	22-1/2" [572 mm]	–	1/8" [3 mm]
TSC15-2-35WH	15" [381 mm]	15" [381 mm]	18" [457 mm]	23-3/8" [594 mm]	–	1/8" [3 mm]
TSC15-2-35PT	15" [381 mm]	15" [381 mm]	18" [457 mm]	23-3/8" [594 mm]	–	1/8" [3 mm]
TSC18-2-35WH	17-1/2" [445 mm]	17-1/2" [445 mm]	18" [457 mm]	23-3/8" [594 mm]	–	1/8" [3 mm]
TSC18-2-35PT	17-1/2" [445 mm]	17-1/2" [445 mm]	18" [457 mm]	23-3/8" [594 mm]	–	1/8" [3 mm]

Example of Frameless / Euro-Style Cabinet Application

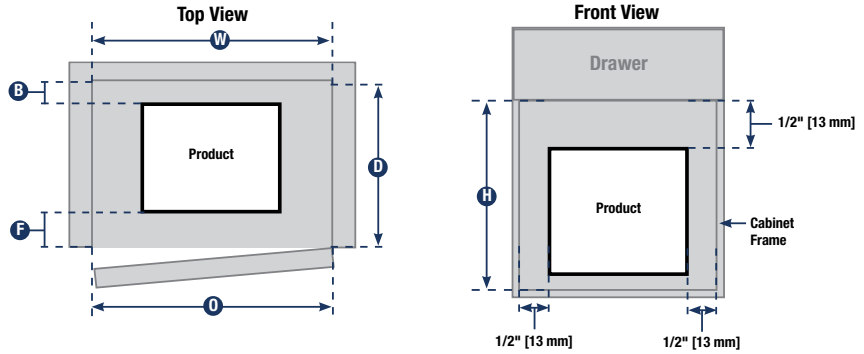

Pull-Outs

Slide-Out Base Blind Corner Unit 160
Pot & Pan Caddy 161
Pull-Out Cookware Organizer 161
Tray Divider Roll-Outs. 162
Wood & Wire Tray Divider Roll-Outs 162
Single-Tier Pull-Out Baskets. 163
Double-Tier Pull-Out Baskets 164
Slide Out Basket 165
Pull-Out Wood Drawer 166
Removable Cleaning Caddy 167
Appliance Lift 168
Cabinet Dimensions. 169

Slide-Out Base Blind Corner Unit

- Chrome
- Provides easy access to hard-to-reach blind corners
- Opens by manually pulling each half of the unit out of cabinet in three easy steps
- Heavy-duty precision ball-bearing slides
- Unit can be installed as left or right handed

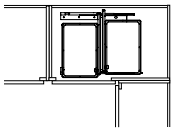

Position 1 (closed)

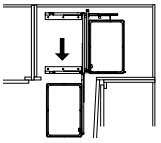

Position 2

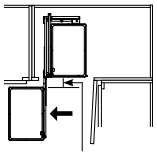

Position 3
1-1/4" [32 mm]
Clearance for Adjacent
Cabinet Door

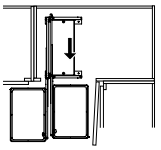

Position 4 (fully open)

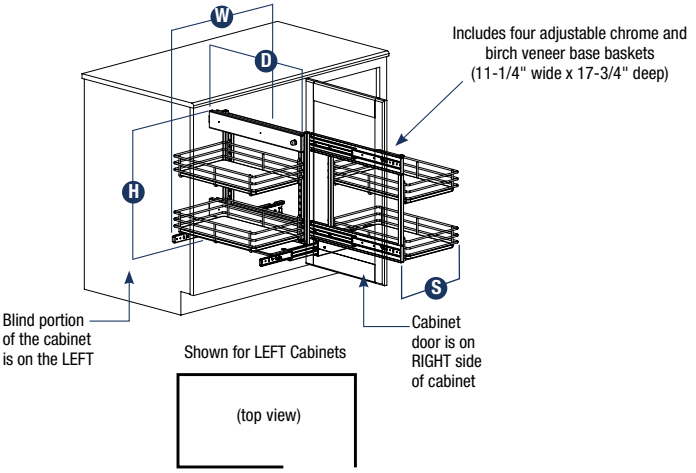

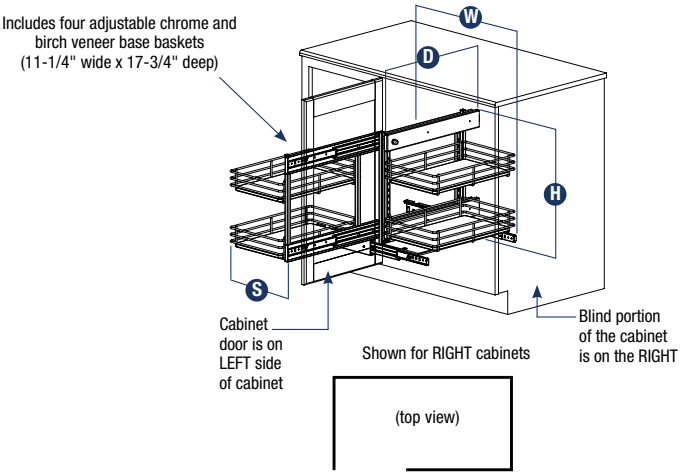

	Assembled Product Dimensions						
Stock #	**Sliding Assembly Width S**	**Height H**	**Width W**	**Depth D**	**Finish**	**Units per Carton**	**Weight per Carton**
SLIDE-OUT BASE BLIND CORNER UNITS							
BCUS-LR-15-CH	11" [279 mm]	20-1/2" [292 mm]	25-1/2" [445 mm]	17-7/8" [572 mm]	Chrome	1	62.9 lbs. [5.7 kg.]

SPS27-FN
(Top and bottom extended)

Pot & Pan Caddy

MADE IN USA

- Two separate pull-out sections provide flexible pot and pan storage and access
- Pre-finished Birch veneer platforms with contoured skirting and Frosted Nickel heavy-gauge wire fencing
- Easy installation with only four screws

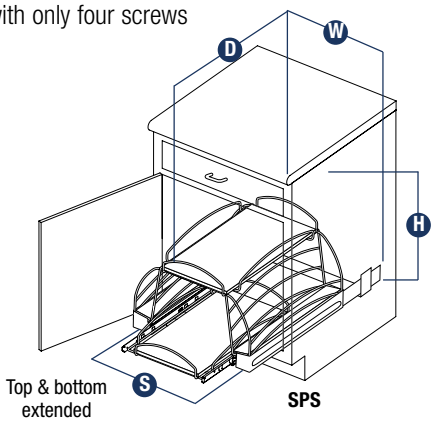

SP-PNP-20-FN

Pull-Out Cookware Organizer

- Soft-close slide technology
- Top rack holds lids and bottom holds pots and pans
- Both racks slide separately for easy access
- Adjustable dividers allow customization for varied size pots and pans
- Top rack adjusts up or down
- Additional dividers sold separetly (PNP-DVDR)

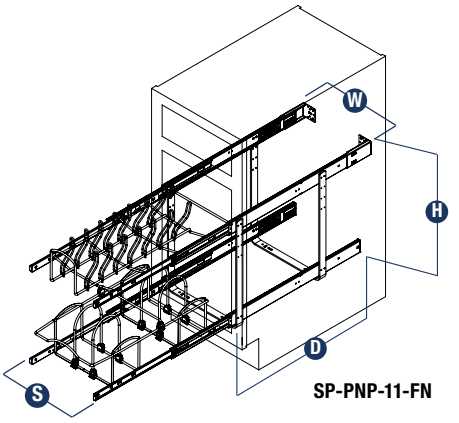

Stock #	Sliding Assembly Width S	Assembled Product Dimensions Width W	Height H	Depth D	Finish	Units per Carton	Weight per Carton
simplyput thoughtfully organized — PULL-OUT COOKWARE ORGANIZER (FULL COLOR RETAIL PACKAGING)							
SP-PNP-11-FN	11-1/2" [292 mm]	11-1/2" [292 mm]	14-11/16"–19-3/4" [373–502 mm]	22-1/8"–23-1/2" [562–597 mm]	Frosted Nickel	1	19 lbs. [8.6 kg.]
SP-PNP-20-FN	20-1/2" [521 mm]	20-1/2" [521 mm]	14-11/16"–19-3/4" [373–502 mm]	22-1/8"–23-1/2" [562–597 mm]	Frosted Nickel	1	24 lbs. [10.9 kg.]
PNP-DVDR	N/A	N/A	N/A	N/A	Frosted Nickel	20 (sets of 3)	20 lbs. [9.1 kg.]
KV POT & PAN CADDY							
SPS21-FN	19-1/2" [495 mm]	19-1/2" [495 mm]	14-1/4" [362 mm]	22-1/4" [565 mm]	Frosted Nickel/Birch	1	32.6 lbs. [14.8 kg.]
SPS27-FN	25-1/2" [648 mm]	25-1/2" [648 mm]	14-1/4" [362 mm]	22-1/4" [565 mm]	Frosted Nickel/Birch	1	33.8 lbs. [15.3 kg.]

Tray Divider Roll-Outs

- KV epoxy-coated roller slides
- Sliding base assembly is 1/2"- thick laminated melamine mounted on epoxy-coated slides and is fully assembled
- Heavy-gauge steel wire partitions section off storage areas

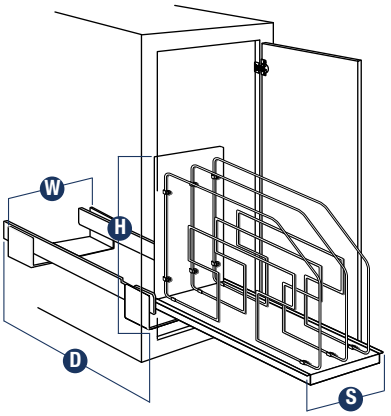

Tray Divider Roll-Out
(TDRO9-W shown)

Wood & Wire Tray Divider Roll-Outs

- Heavy gauge Frosted Nickel wire frames
- Birch veneer base platform
- Slides out on heavy-duty, full-extension ball-bearing slides

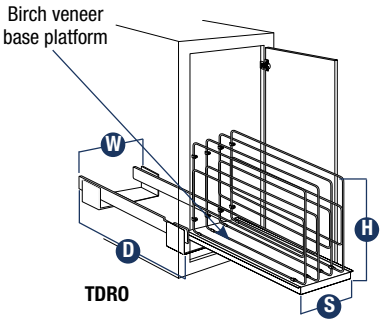

	Assembled Product Dimensions						
Stock #	**Sliding Assembly Width S**	**Width W**	**Height H**	**Depth D**	**Finish**	**Units per Carton**	**Weight per Carton**
TRAY DIVIDER ROLL-OUTS							
TDR06-W	5-7/16" [138 mm]	6" [152 mm]	19-1/2" [495 mm]	22" [559 mm]	White	1	9.0 lbs. [4.1 kg.]
TDR09-W	8-7/16" [214 mm]	9" [229 mm]	19-1/2" [495 mm]	22" [559 mm]	White	1	11.9 lbs. [5.4 kg.]
WOOD & WIRE TRAY DIVIDER ROLL-OUTS							
TDRO-FNW-6	5-1/2" [140 mm]	5-1/2" [140 mm]	14" [356 mm]	22-1/4" [565 mm]	Frosted Nickel/Birch	1	11.5 lbs. [5.2 kg.]
TDRO-FNW-9	8-1/2" [216 mm]	8-1/2" [216 mm]	14" [356 mm]	22-1/4" [565 mm]	Frosted Nickel/Birch	1	13.9 lbs. [6.3 kg.]

* Total sliding assembly width is equal to total width of Side-Mount Basket application plus 5/8" [16 mm].

Single-Tier Pull-Out Baskets

- Soft-close slide technology
- Basket pulls out completely for full access

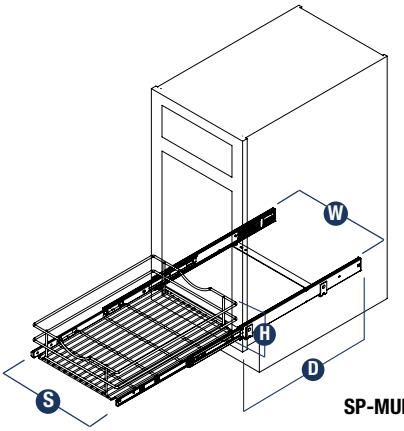

SP-MUBSC-14-FN

Stock #	Sliding Assembly Width S	Assembled Product Dimensions Width W	Height H	Depth D	Finish	Units per Carton	Weight per Carton
simplyput thoughtfully organized PULL-OUT BASKETS (FULL COLOR RETAIL PACKAGING)							
SP-MUBSC-11-FN	11-1/2" [292 mm]	11-1/2" [292 mm]	5-11/16" [144 mm]	20" [508 mm]	Frosted Nickel	1	8.4 lbs. [3.8 kg.}
SP-MUBSC-14-FN	14-1/2" [368 mm]	14-1/2" [368 mm]	5-11/16" [144 mm]	20" [508 mm]	Frosted Nickel	1	9.6 lbs. [4.4 kg.}
SP-MUBSC-17-FN	17-1/2" [445 mm]	17-1/2" [445 mm]	5-11/16" [144 mm]	20" [508 mm]	Frosted Nickel	1	10.8 lbs. [4.9 kg.}
SP-MUBSC-20-FN	20-1/2" [521 mm]	20-1/2" [521 mm]	5-11/16" [144 mm]	20" [508 mm]	Frosted Nickel	1	11.8 lbs. [5.4 kg.}

Double-Tier Pull-Out Baskets

- Soft-close slide technology
- Top basket adjusts up or dow
- Both baskets slide separately for easy access

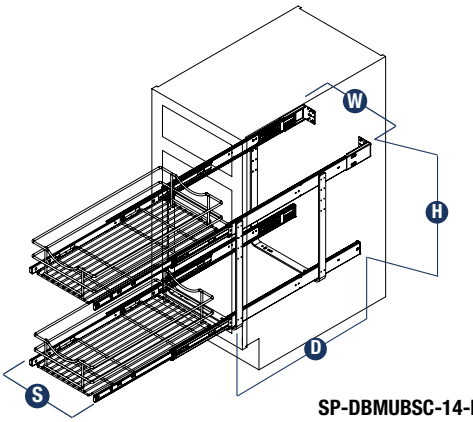

SP-DBMUBSC-14-FN

Stock #	Sliding Assembly Width S	Assembled Product Dimensions Width W	Height H	Depth D	Finish	Units per Carton	Weight per Carton
simplyput thoughtfully organized® DOUBLE-TIER PULL-OUT BASKETS (FULL COLOR RETAIL PACKAGING)							
SP-DBMUBSC-8-FN	8-1/2" [216 mm]	8-1/2" [216 mm]	14-11/16"–19-3/16" [297–487 mm]	22-1/8" [562 mm]	Frosted Nickel	1	19 lbs. [8.6 kg.]
SP-DBMUBSC-11-FN	11-1/2" [292 mm]	11-1/2" [292 mm]	14-11/16"–19-3/16" [297–487 mm]	22-1/8" [562 mm]	Frosted Nickel	1	21.4 lbs. [9.7 kg.]
SP-DBMUBSC-14-FN	14-1/2" [368 mm]	14-1/2" [368 mm]	14-11/16"–19-3/16" [297–487 mm]	22-1/8" [562 mm]	Frosted Nickel	1	26.2 lbs. [11.9 kg.]
SP-DBMUBSC-17-FN	17-1/2" [445 mm]	17-1/2" [445 mm]	14-11/16"–19-3/16" [297–487 mm]	22-1/8" [562 mm]	Frosted Nickel	1	26.2 lbs. [11.9 kg.]
SP-DBMUBSC-20-FN	20-1/2" [521 mm]	20-1/2" [521 mm]	14-11/16"–19-3/16" [297–487 mm]	22-1/8" [562 mm]	Frosted Nickel	1	28.6 lbs. [13.0 kg.]

Download at www.kv.com > Resource Library

Slide Out Basket

- Slides out for easy access
- Simple installation with just four screws

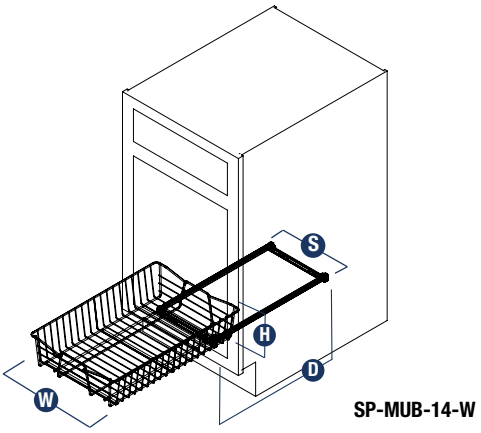

	Sliding Assembly	Assembled Product Dimensions					
Stock #	Width S	Width W	Height H	Depth D	Finish	Units per Carton	Weight per Carton
simplyput thoughtfully organized SLIDE OUT BASKET (FULL COLOR RETAIL PACKAGING)							
SP-MUB-14-W	9-11/32" [237 mm]	14" [356 mm]	5-1/4" [133 mm]	20-1/4" [514 mm]	White	1	9.75 lbs. [4.4 kg.]

Pull-Out Wood Drawer

- Soft-close slide technology
- Cabinet drawer pulls out for full access
- Installs easily in just minutes

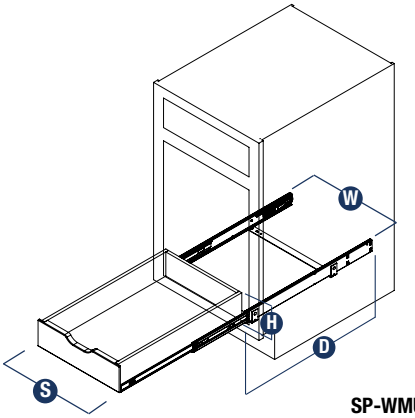

SP-WMUB-14-WD

	Sliding Assembly	Assembled Product Dimensions					
Stock #	Width S	Width W	Height H	Depth D	Finish	Units per Carton	Weight per Carton
simplyput thoughtfully organized PULL-OUT WOOD DRAWER (FULL COLOR RETAIL PACKAGING)							
SP-WMUB-14-WD	14-5/8" [371 mm]	14-5/8" [371 mm]	5" [127 mm]	22" [559 mm]	White	1	9 lbs. [4.1 kg.]

Removable Cleaning Caddy

- Easily detach from the mounted slide system and take along
- Easy-to-clean bottom tray catches drips and spills
- Paper towel holder on top mounts on the left or right to accommodate plumbing.

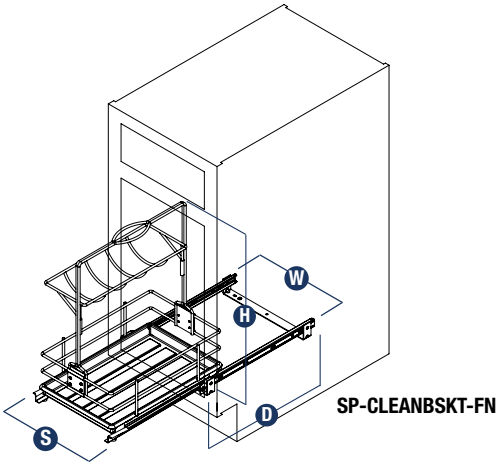

	Sliding Assembly	Assembled Product Dimensions					
Stock #	Width S	Width W	Height H	Depth D	Finish	Units per Carton	Weight per Carton
simplyput thoughtfully organized SLIDE OUT BASKET (FULL COLOR RETAIL PACKAGING)							
SP-CLEANBSKT-FN	11-1/2" [292 mm]	11-1/2" [292 mm]	5" [127 mm]	15" [381 mm]	Frosted Nickel	1	8.2 lbs. [3.7 kg.]

HAL-20 with WAL13.5-1
(up position)

HAL-20 with WAL13.5-1
(down position)

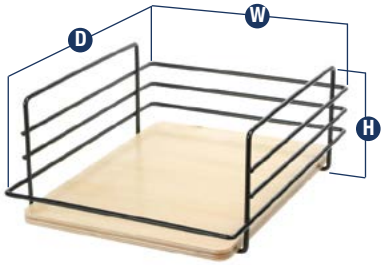

HAL-BSKT
(Accessory Basket)

Appliance Lift

- Assists with raising or lowering kitchen appliances using a gas cylinder and then locks securely into place
- Lift can be positioned at two different levels: flush with counter or 2" below counter
- For storage use only, do not use appliances on the lift

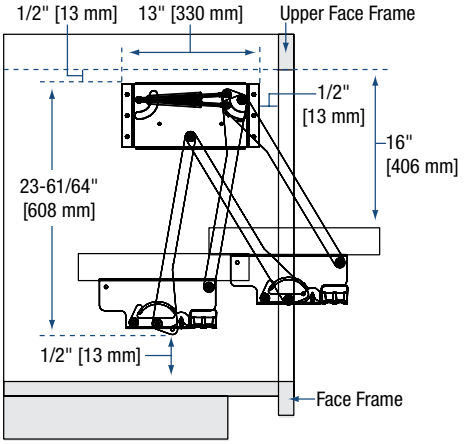

NOTE: Install 1/2" down and 1/2" back from upper Face Frame (as shown)

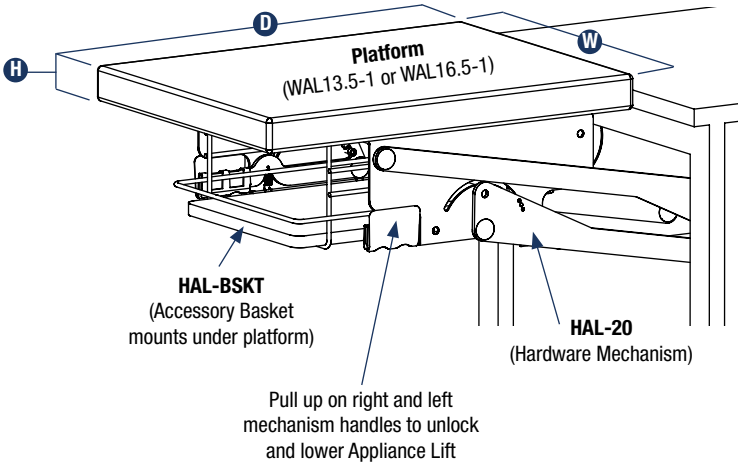

	Assembled Product Dimensions						
Stock #	**Sliding Assembly Width S**	**Width W**	**Height H**	**Depth D**	**Finish**	**Units per Carton**	**Weight per Carton**
APPLICANCE LIFT PARTS							
HAL-20	Hardware Mechanism (left and right arm)	Platform Surface + 2-1/2" [64 mm]	23-61/64" [608 mm]	Maximum of 13" [330 mm] or Platform Depth	Platinum	1	13.7 lbs. [6.2 kg.]
WAL13.5-1	13-1/2" Maple Block Platform	13-1/2" [343 mm]	1-1/2" [38 mm]	18" [457 mm]	Maple	1	9.9 lbs. [4.5 kg.]
WAL16.5-1	16-1/2" Maple Block Platform	16-1/2" [419 mm]	1-1/2" [38 mm]	18" [457 mm]	Maple	1	12.3 lbs. [5.6 kg.]
HAL-BSKT	Accessory Basket	9-7/8" [251 mm]	4-7/8" [124 mm]	12-7/8" [327 mm]	Black/Birch	1	4.2 lbs. [1.9 kg.]

Cabinet Dimensions

	Min. Cabinet Opening		Min. Interior Cabinet Dimensions		Min. Cabinet Clearance	
Stock #	**Width O**	**Width W**	**Height* H**	**Depth D**	**Front F**	**Back B**
SLIDE-OUT BASE BLIND CORNER UNITS						
BCUS-LR-15-CH						
POT & PAN CADDY						
SPS21-FN	20" [508 mm]	20" [508 mm]	14-3/4" [375 mm]	22-3/4" [578 mm]	1/4" [6 mm]	1/4" [6 mm]
SPS27-FN	26" [660 mm]	26" [660 mm]	14-3/4" [375 mm]	22-3/4" [578 mm]	1/4" [6 mm]	1/4" [6 mm]
WOOD & WIRE TRAY DIVIDER ROLL-OUTS						
TDRO-FNW-6	6" [152 mm]	6" [152 mm]	14-1/2" [368 mm]	22-3/4" [578 mm]	1/4" [6 mm]	1/4" [6 mm]
TDRO-FNW-9	9" [229 mm]	9" [229 mm]	14-1/2" [368 mm]	22-3/4" [578 mm]	1/4" [6 mm]	1/4" [6 mm]
APPLICANCE LIFT (SEE PAGE 167 FOR ADDITIONAL CLEARANCES)						
HAL-20	Platform Width + 1" [25 mm]	Platform Width + 2-1/2" [64 mm]	25" [634 mm]	Minimum of 16-1/2" [419 mm] OR platform depth	1/2" [13 mm]	1/2" [13 mm]
PULL-OUT TOWEL BAR						
P793 ANO	5-5/16" [135 mm]	5-5/16" [135 mm]	1-13/16" [46 mm]	18-1/4" [464 mm]	1/4" [6 mm]	1/4" [6 mm]
TRY DIVIDER ROLL-OUTS						
TDR06-W	6" [152 mm]	6-1/2" [165 mm]	20" [508 mm]	22-1/2" [572 mm]	1/4" [6 mm]	1/4" [6 mm]
TDR09-W	9" [229 mm]	9-1/2" [241 mm]	20" [508 mm]	22-1/2" [572 mm]	1/4" [6 mm]	1/4" [6 mm]

Example of Frameless / Euro-Style Cabinet Application

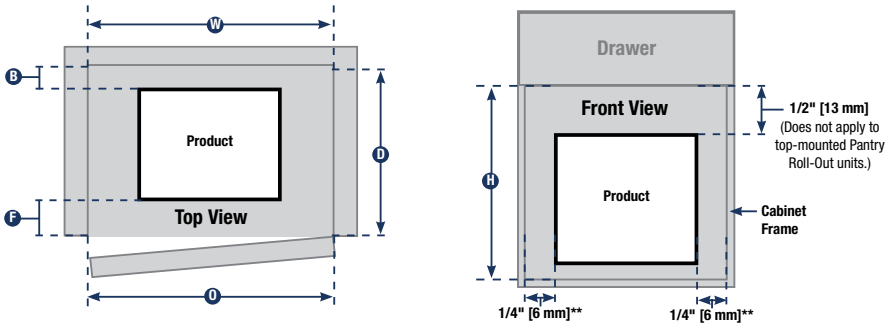

Example of Face Frame Cabinet Application

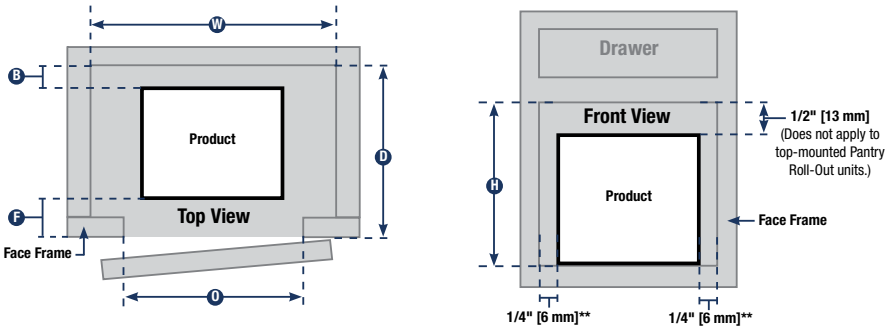

* Minimum Cabinet Opening Width AND Minimum Cabinet Interior Width equals total width of completely assembled unit with all baskets applied, plus 1/2" clearance per side (1" total clearance for center-mounted units, 1/2" side clearance for side-mounted units). Dimensions shown are recommended minimum cabinet dimensions and clearances.

** Slide-out Base Blind Corner Units and Base Cabinet Organizers require 1/2" side clearance on one side, not both.

Lazy Susans

Polymer Full-Round Lazy Susans 171
Polymer Door-Mount Lazy Susans. 172
Polymer Kidney-Shaped Lazy Susans 172
Polymer Half-Moon Lazy Susans. 173
Individual Hardware Replacement Parts. 174
Lazy Susan Post Replacement Parts 174
Cabinet and Shelf Lip Dimensions. 175
Lasy Susan Post Diagrams 177

Download at www.kv.com > Resource Library

Polymer Full-Round Lazy Susans

- Polymer construction with double wall rim and strengthening ribs
- Rim height is 1"
- Standard pack includes shelves, one post, installation template and hardware
- Independently rotating shelves

3 Shelf

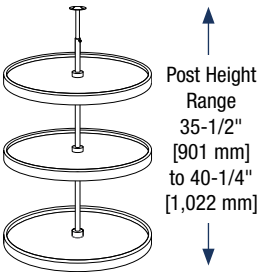

STANDARD PACK		BULK PACK		Diameter	Assembled Product Dimensions			Min. Cabinet Opening	Weight Limit per Shelf	Finish	STANDARD PACK		BULK PACK	
Stock #	Number of Shelves	Stock #	Number of Shelves	A	B	C	D				Units per Carton	Carton Weight	Units per Carton	Carton Weight
FULL-ROUND														
PFN18ST-W	2	–	–	18" [457.2 mm]	–	–	–	5-3/4" [146 mm]	30 lbs. [13.6 kg.]	White	1	8.4 lbs. [3.8 kg.]	–	–
PFN18S3T-W	3	–	–	18" [457.2 mm]	–	–	–	5-3/4" [146 mm]	30 lbs. [13.6 kg.]	White	1	12.1 lbs. [5.5 kg.]	–	–
PFN20ST-W	2	–	–	20" [508 mm]	–	–	–	6-3/4" [171 mm]	38 lbs. [17.1 kg.]	White	1	10.1 lbs. [4.6 kg.]	–	–
PFN20S3T-W	3	–	–	20" [508 mm]	–	–	–	6-3/4" [171 mm]	38 lbs. [17.1 kg.]	White	1	14.3 lbs. [6.5 kg.]	–	–
PFN24ST-W	2	–	–	24" [609.6 mm]	–	–	–	8-1/4" [210 mm]	55 lbs. [24.9 kg.]	White	1	12.1 lbs. [5.5 kg.]	–	–
PFN28ST-W	2	PFN28SBT-W*	10	28" [711.2 mm]	–	–	–	9-7/8" [251 mm]	78 lbs. [35.4 kg.]	White	1	15.5 lbs. [7.0 kg.]	5	74.4 lbs. [33.8 kg.]
PFN32ST-W	2	–	–	32" [812.8 mm]	–	–	–	11-1/2" [292 mm]	78 lbs. [35.4 kg.]	White	1	18.2 lbs. [8.3 kg.]	–	–

* Bulk Packs include 25-1/2" [648 mm] – 31-1/2" [800 mm] posts and hardware.

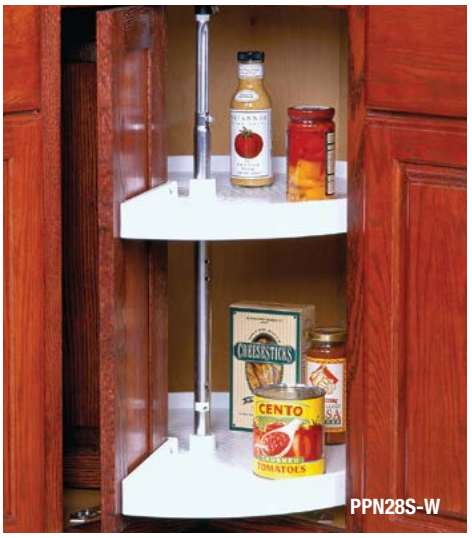

Polymer Door-Mount Lazy Susans

- Doors attach to Lazy Susan shelves for automatic shelf retrieval

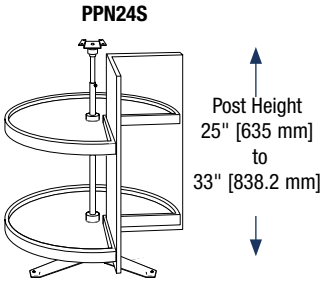

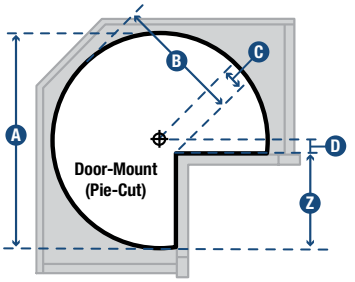

Stock #	Number of Shelves	Diameter A	Assembled Product Dimensions B	C	D	Z	Finish	Units per Carton	Carton Weight
DOOR-MOUNT									
PPN24S-W	2	24" [609 mm]	14-1/4" [362 mm]	2-1/4" [57 mm]	1-5/8" [41 mm]	10-3/8" [264 mm]	White	1	10.7 lbs. [4.9 kg.]
PPN28S-W	2	28" [711 mm]	18-1/4" [464 mm]	4-1/4" [108 mm]	3-1/16" [78 mm]	10-15/16" [278 mm]	White	1	13.8 lbs. [6.3 kg.]

Polymer Kidney-Shaped Lazy Susans

- Polymer construction with double wall rim and strengthening ribs
- Rim height is 1"
- Standard pack includes shelves, one post, installation template and hardware
- Independently rotating shelves

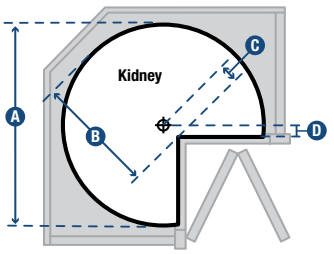

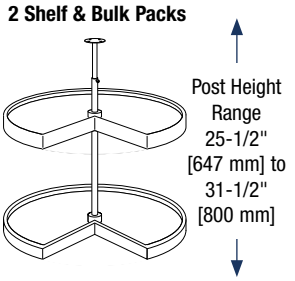

STANDARD PACK Stock #	STANDARD PACK Number of Shelves	BULK PACK Stock #	BULK PACK Number of Shelves	Diameter A	Assembled Product Dimensions B	C	D	Min. Cabinet Opening	Weight Limit per Shelf	Finish	STANDARD PACK Units per Carton	STANDARD PACK Carton Weight	BULK PACK Units per Carton	BULK PACK Carton Weight
KIDNEY-SHAPED														
PKN18ST-W	2	–	–	18" [457 mm]	10-1/4" [260 mm]	1-1/4" [31 mm]	15/16" [24 mm]	–	23 lbs. [10.4 kg.]	White	1	7.9 lbs. [3.6 kg.]	–	–
PKN24ST-W	2	–	10	24" [609 mm]	14-1/4" [362 mm]	2-1/4" [57 mm]	1-5/8" [40 mm]	–	45 lbs. [20.4 kg.]	White	1	9.9 lbs. [4.5 kg.]	5	45.2 lbs. [20.5 kg.]
PKN28ST-W	2	PKN28SBT-W*	10	28" [711 mm]	18-1/4" [464 mm]	4-1/4" [107 mm]	3-1/16" [76 mm]	–	67 lbs. [30.4 kg.]	White	1	13 lbs. [5.9 kg.]	5	58.8 lbs. [26.7 kg.]
PKN32ST-W	2	–	–	32" [812 mm]	22-1/4" [565 mm]	6-1/4" [158 mm]	4-7/16" [112 mm]	–	93 lbs. [42.2 kg.]	White	1	13 lbs. [5.9 kg.]	–	–

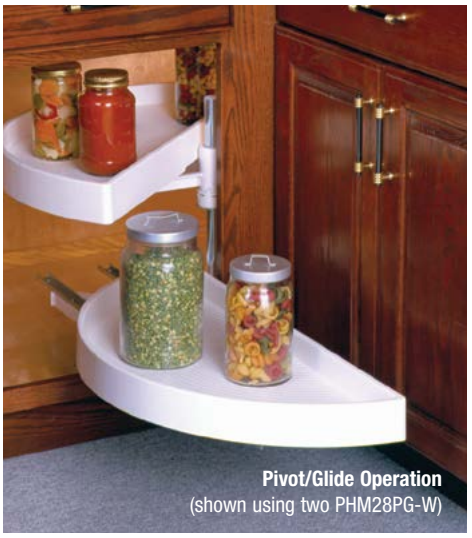

Pivot/Glide Operation
(shown using two PHM28PG-W)

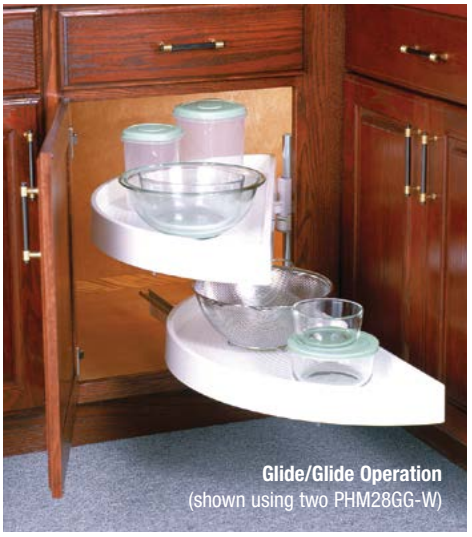

Glide/Glide Operation
(shown using two PHM28GG-W)

Polymer Half-Moon Lazy Susans

- Shelves move independently on chrome 1" diameter post
- All models operate in both right- or left-handed applications
- Pivot/Pivot Operation: both shelves pivot out
- Pivot/Glide Operation: top shelf pivots out / bottom shelf pivots and glides out
- Glide/Glide Operation: both shelves pivot and glide out
- All glide-out shelves extend 11-3/4" on precision ball-bearing slides

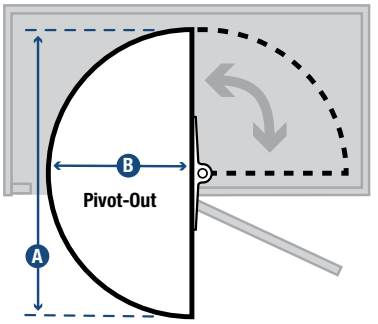

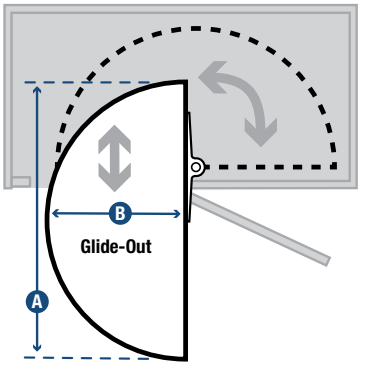

PHM28PG-W

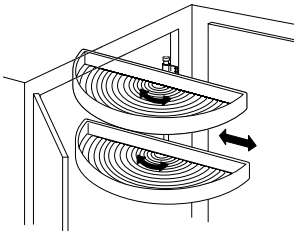

PHM28PG-W

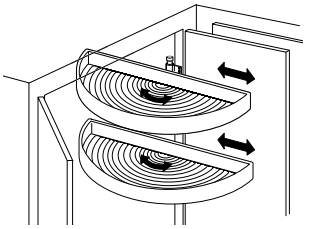

PHM28PP-W

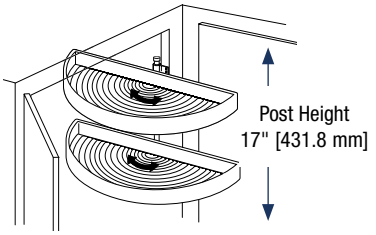

Stock #	A	B	Finish	Units per Carton	Carton Weight
PIVOT/PIVOT [TOP/BOTTOM] SHELF MOTION					
PHM28PP-W	27-7/8" [708 mm]	13" [330 mm]	White	1	13 lbs. [5.9 kg.]
PHM34PP-W	39-7/8" [1,013 mm]	16" [406 mm]	White	1	16.6 lbs. [7.5 kg.]
PIVOT/GLIDE [TOP/BOTTOM] SHELF MOTION					
PHM28PG-W	27-7/8" [708 mm]	13" [330 mm]	White	1	16.5 lbs. [7.5 kg.]
PHM34PG-W	33-7/8" [860 mm]	16" [406 mm]	White	1	20 lbs. [9.1kg.]
PHM40PG-W	39-7/8" [1,013 mm]	19" [483 mm]	White	1	27.4 lbs. [12.4 kg.]
GLIDE/GLIDE [TOP/BOTTOM] SHELF MOTION					
PHM28GG-W	27-7/8" [708 mm]	13" [330 mm]	White	1	19.8 lbs. [9.0 kg.]
PHM34GG-W	33-7/8" [860 mm]	16" [406 mm]	White	1	22.1 lbs. [10.0 kg.]
PHM40GG-W	39-7/8" [1,013 mm]	19" [483 mm]	White	1	30.8 lbs. [14.0 kg.]

APPLICATION EXAMPLE

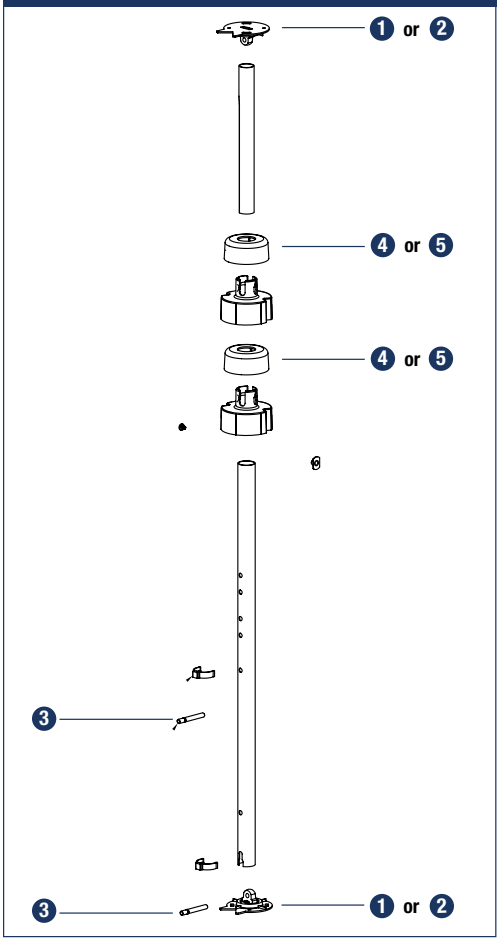

Individual Hardware Replacement Parts

HUB-PIN

Bearing Pin for Lazy Susans

(For Polymer/Wood Full-Round, Kidney Door-Mount, and Single Shelf Lazy Susans)

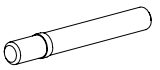

Stock #	Description	Units	Weight per Unit
INDIVIDUAL HARDWARE PARTS (SOLD PER UNIT)			
HUB-PIN	Bearing Pin for Lazy Susans	1	0.5 lbs. [0.2 kg.]

For POLYMER Full-Round / Kidney Shelves

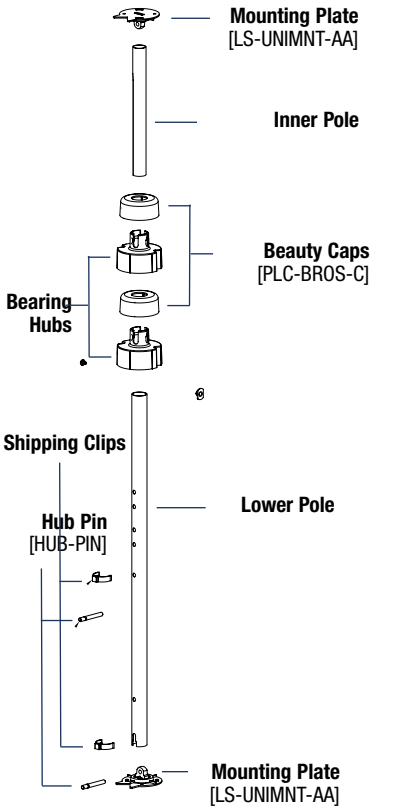

Lazy Susan Post Replacement Parts

Standard Pack #	Pkd.	For Shelf Types(s)	Bearing Hubs	Beauty/ Post Caps	Mounting Plates	Post Height Range	STD. PK. Carton Weight	Bulk PK. Carton Weight
POST HARDWARE PACKS: KIDNEY-SHAPED								
HN-K-TEL-PT	1	Polymer	White	Chrome	Metal Unimount	25-1/2" – 31-1/2" [635 mm – 787 mm]	1.9 lbs. [0.9 kg.]	9.5 lbs. [4.3 kg.]

Download at www.kv.com > Resource Library

Cabinet and Shelf Lip Dimensions

Stock #	E	F	G	H	I	J	K	Mounting
POLYMER KIDNEY-SHAPED LAZY SUSANS								
PKN18ST-W	9" [229 mm]	11-7/16" [291 mm]	1-11/16" [43 mm]	7-5/8" [194 mm]	1-3/4" [44 mm]	1" [25 mm]	1/2" – 1-5/16" [13 – 33 mm]	Top/Bottom
PKN24ST-W	12" [305 mm]	15-1/8" [384 mm]	2-3/8" [60 mm]	10" [254 mm]	1-3/4" [44 mm]	1" [25 mm]	1/2" – 1-5/16" [13 – 33 mm]	Top/Bottom
PKN28ST-W	14" [356 mm]	18-9/16" [471 mm]	3-13/16" [97 mm]	10-1/4" [260 mm]	1-3/4" [44 mm]	1" [25 mm]	1/2" – 1-5/16" [13 – 33 mm]	Top/Bottom
PKN32ST-W	16" [406 mm]	21-15/16" [557 mm]	5-3/16" [132 mm]	10-1/2" [267 mm]	1-3/4" [44 mm]	1" [25 mm]	1/2" – 1-5/16" [13 – 33 mm]	Top/Bottom

E = Radius
F = Min. Cabinet Depth
G = Center of Rotation
H = Min. Cabinet Opening

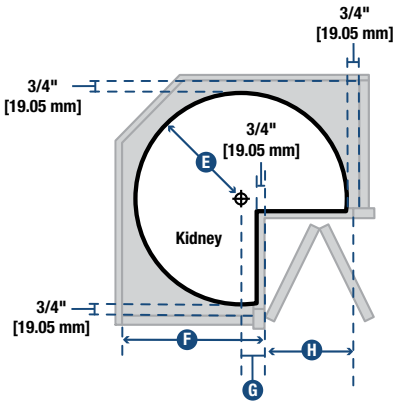

Shelf Lip

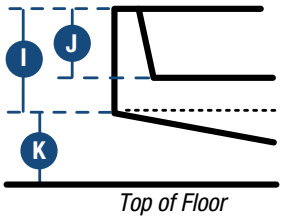

POLYMER FULL-ROUND LAZY SUSANS

A minimum 3/4" side clearance is recommended between Full-Round Lazy Susan shelves and all adjacent interior surfaces (cabinet, wall, etc.).

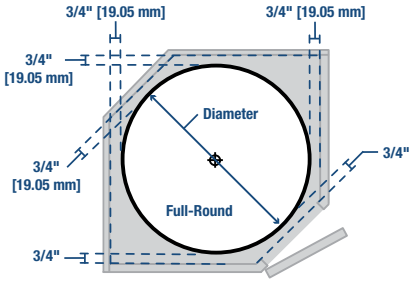

Dimensions shown are recommended minimum cabinet dimensions and clearances.

Cabinet and Shelf Lip Dimensions

Stock #	E	F	G	H	I	J	K	Mounting
POLYMER DOOR-MOUNT / PIE-CUT LAZY SUSANS								
PPN24S-W	12" [305 mm]	15-1/8" [384 mm]	2-3/8" [60 mm]	10" [254 mm]	1-3/4" [44 mm]	1" [25 mm]	1-1/16 – 1-7/8" [27 – 47 mm]	Top/Bottom
PPN28S-W	14" [356 mm]	18-9/16" [471 mm]	3-13/16" [97 mm]	10-1/4" [260 mm]	1-3/4" [44 mm]	1" [25 mm]	1-1/16 – 1-7/8 [27 – 47 mm]	Top/Bottom

E = Radius
F = Min. Cabinet Depth
G = Center of Rotation
H = Min. Cabinet Opening

1/4" Gap Between Face Frame and Door

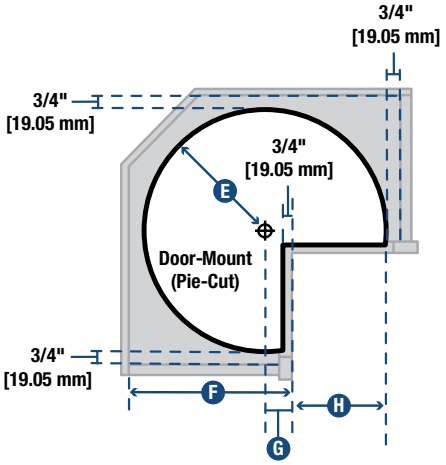

POLYMER Shelf Lip

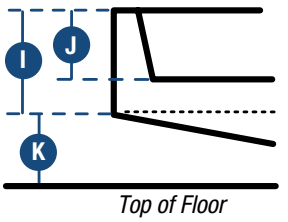

Stock #	F	H	I	J	K	Y	Mounting
POLYMER HALF-MOON LAZY SUSANS							
PHM28PP-W	16-1/4" [413 mm]	13-3/4" [349 mm]	2-1/2" [64 mm]	1-1/2" [38 mm]	2" [51 mm]	11-1/2" [292 mm]	Side/Bottom
PHM28PG-W	16-1/4" [413 mm]	13-3/4" [349 mm]	2-1/2" [64 mm]	1-1/2" [38 mm]	2-11/16" [68 mm]	23-1/4" [591 mm]	Side/Bottom
PHM34PG-W	19-1/4" [489 mm]	16-3/4" [425 mm]	2-1/2" [64 mm]	1-1/2" [38 mm]	2-11/16" [68 mm]	26-1/4" [667 mm]	Side/Bottom
PHM40PG-W	22-1/4" [565 mm]	19-3/4" [502 mm]	2-1/2" [64 mm]	1-1/2" [38 mm]	2-11/16" [68 mm]	29-1/4" [743 mm]	Side/Bottom
PHM28GG-W	16-1/4" [413 mm]	13-3/4" [349 mm]	2-1/2" [64 mm]	1-1/2" [38 mm]	2-11/16" [68 mm]	23-1/4" [591 mm]	Side/Bottom
PHM34GG-W	19-1/4" [489 mm]	16-3/4" [425 mm]	2-1/2" [64 mm]	1-1/2" [38 mm]	2-11/16" [68 mm]	26-1/4" [677 mm]	Side/Bottom
PHM40GG-W	22-1/4" [565 mm]	19-3/4" [502 mm]	2-1/2" [64 mm]	1-1/2" [38 mm]	2-11/16" [68 mm]	29-1/4" [743 mm]	Side/Bottom

F = Min. Cabinet Depth
H = Min. Cabinet Opening

POLYMER Shelf Lip

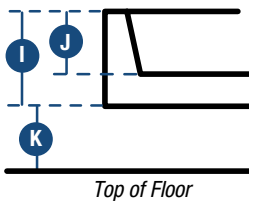

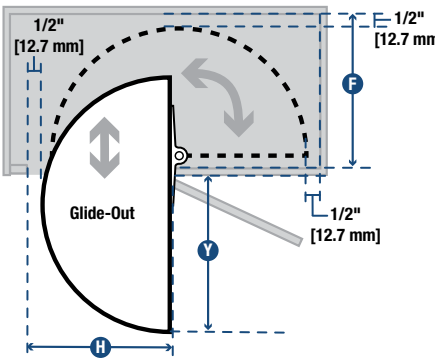

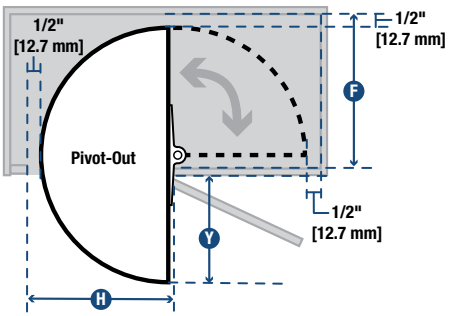

Dimensions shown are recommended minimum cabinet dimensions and clearances.

Lasy Susan Post Diagrams

For POLYMER Door-Mount/Pie-Cut Lazy Susans

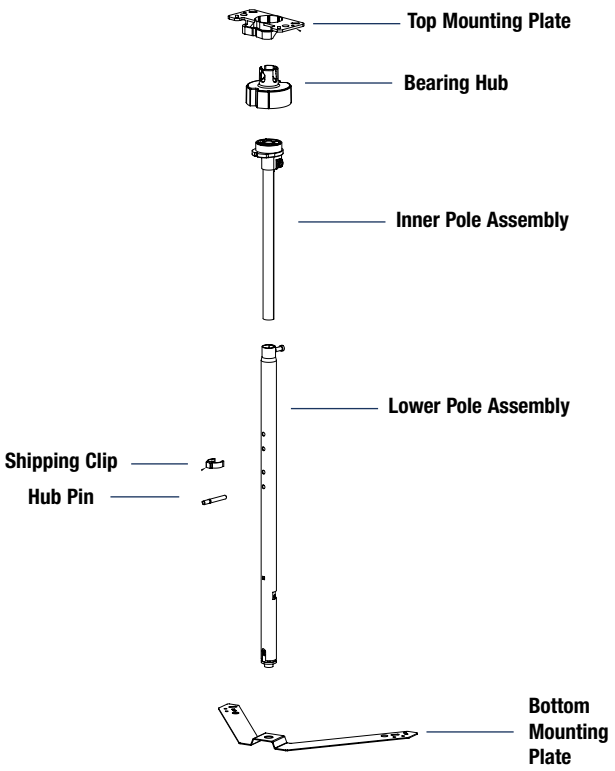

For POLYMER Pivot-Out Glide-Out Lazy Susan Shelves

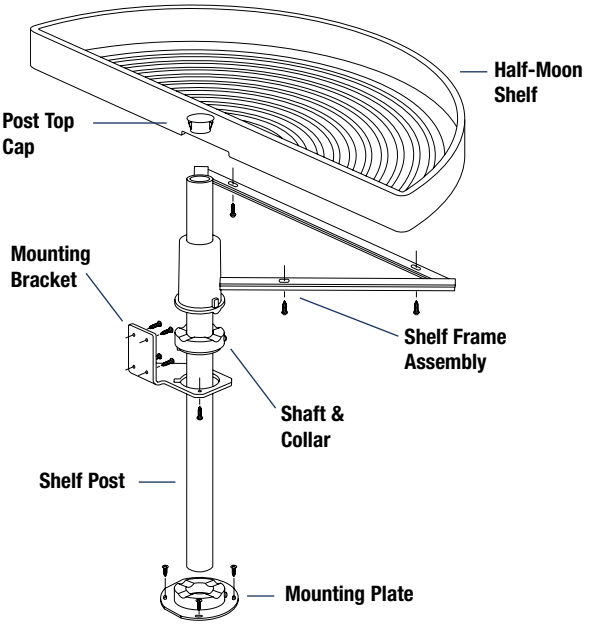

For POLYMER Half-Moon Glide-Out Lazy Susan Shelves

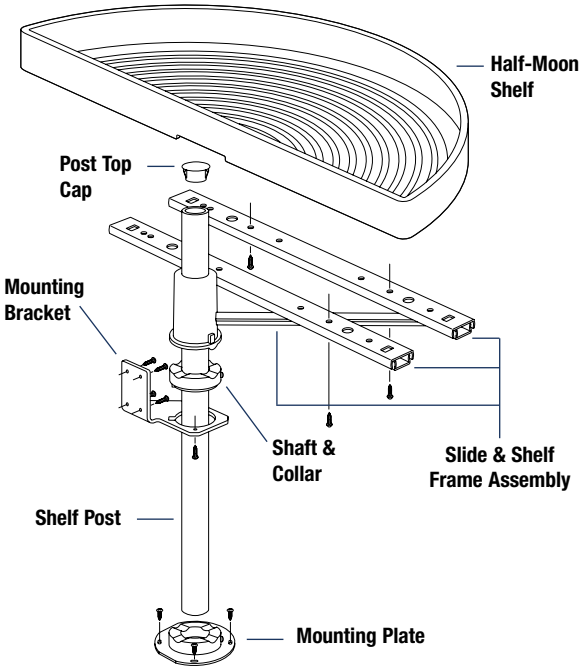

For illustration purposes diagrams on this page are shown with one shelf. See individual product pages for more information.

Lazy Susan Post Diagrams

POLYMER HALF MOON HINGE BRACKETS

For PHM28 and PHM34 Part Numbers

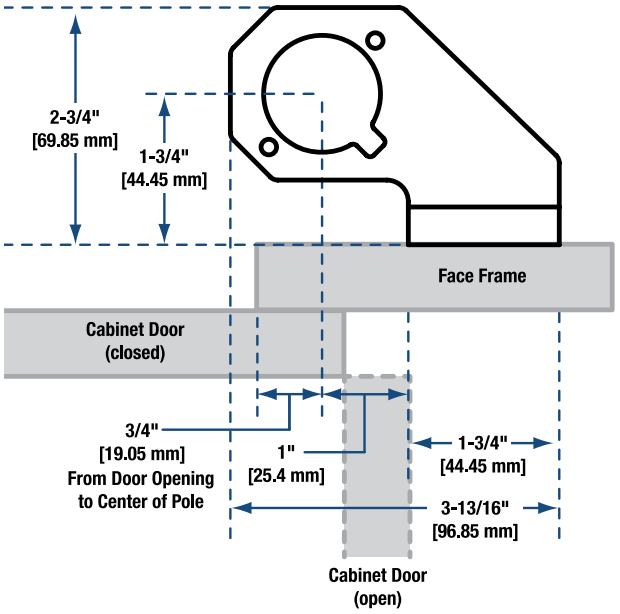

NOTE: For frameless cabinet applications, move bracket 1-1/4" [31.75 mm] toward cabinet opening.

For PHM40 Part Numbers

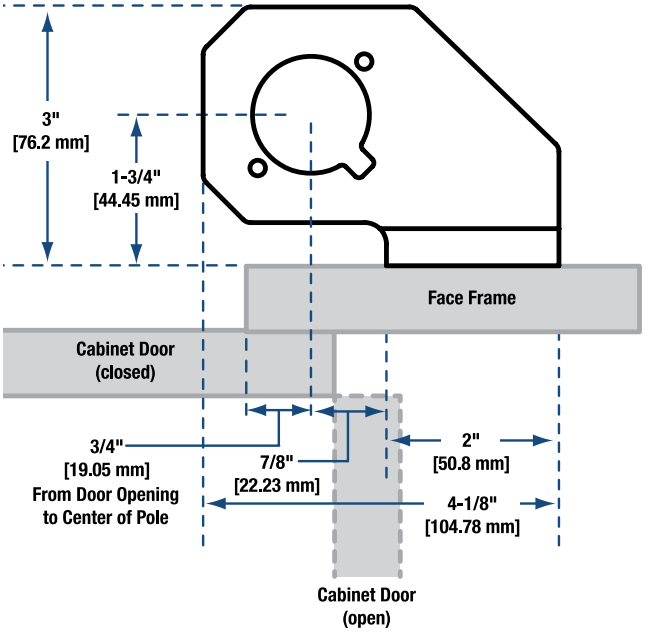

NOTE: For frameless cabinet applications, move bracket 1-1/4" [31.75 mm] toward cabinet opening.

Sink Front Trays

Steel Sink Front Trays. 180
Polymer Sink Front Trays 181
Extruded Sink Front Trays. 183
Scissor & Euro-Tray Hinges 184
Cabinet Dimensions. 185

Steel Sink Front Trays

- 2" deep tray
- Designed for use with Scissor or Euro-Tray Hinges (Sold separately. See page 161.)
- For use with face frame or frameless (Euro-Style) cabinetry

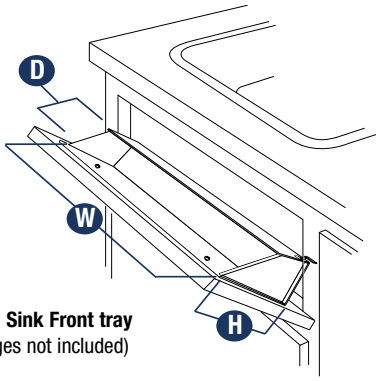

Steel Sink Front tray
(Hinges not included)

Steel Sink Front Trays

(with stops)

- 1-5/8" built-in stop prevents items from tipping out
- Designed for use with standard self-closing hinges (not included) used on most cabinetry
- For use with face frame or frameless (Euro-Style) cabinetry

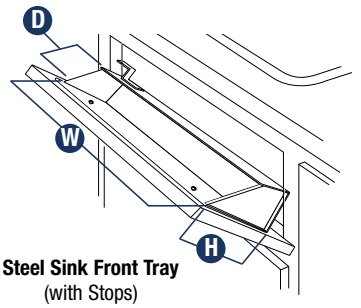

Steel Sink Front Tray
(with Stops)

Stock #	Width W	Height* H	Depth D	Finish	Units per Carton	Weight per Carton
STEEL SINK FRONT TRAYS (WITHOUT STOPS)						
SF10	10-1/16" [256 mm]	3" [76 mm]	2" [51 mm]	Stainless Steel	10	4.7 lbs. [2.1 kg.]
SF11	11-5/16" [287 mm]	3" [76 mm]	2" [51 mm]	Stainless Steel	10	4.9 lbs. [2.2 kg.]
SF13	13-1/16" [332 mm]	3" [76 mm]	2" [51 mm]	Stainless Steel	10	5.6 lbs. [2.5 kg.]
SF14	14" [356 mm]	3" [76 mm]	2" [51 mm]	Stainless Steel	10	6.7 lbs. [3.0 kg.]
SF16	16-1/16" [408 mm]	3" [76 mm]	2" [51 mm]	Stainless Steel	10	7.1 lbs. [3.2 kg.]
SF19	19-1/16" [484 mm]	3" [76 mm]	2" [51 mm]	Stainless Steel	10	7.6 lbs. [3.4 kg.]
SF22	22-1/16" [560 mm]	3" [76 mm]	2" [51 mm]	Stainless Steel	10	8.9 lbs. [4.0 kg.]
SF25	25-1/16" [637 mm]	3" [76 mm]	2" [51 mm]	Stainless Steel	10	9.4 lbs. [4.2 kg.]
SF28	28-1/16" [713 mm]	3" [76 mm]	2" [51 mm]	Stainless Steel	10	10.4 lbs. [4.7 kg.]
SF31	31-1/16" [789 mm]	3" [76 mm]	2" [51 mm]	Stainless Steel	10	11.2 lbs. [5.0 kg.]
STEEL SINK FRONT TRAYS (WITH STOPS)						
SF10W	11-5/8" [295 mm]	3" [76 mm]	3" [76 mm]	Stainless Steel	10	5 lbs. [2.3 kg.]
SF11W	12-7/8" [327 mm]	3" [76 mm]	3" [76 mm]	Stainless Steel	10	5.4 lbs. [2.4 kg.]
SF13W	14-5/8" [371 mm]	3" [76 mm]	3" [76 mm]	Stainless Steel	10	5.8 lbs. [2.6 kg.]
SF14W	15-9/16" [395 mm]	3" [76 mm]	3" [76 mm]	Stainless Steel	10	6.0 lbs. [2.7 kg.]
SF16W	17-5/8" [448 mm]	3" [76 mm]	3" [76 mm]	Stainless Steel	10	6.9 lbs. [3.1 kg.]
SF19W	20-5/8" [524 mm]	3" [76 mm]	3" [76 mm]	Stainless Steel	10	7.6 lbs. [3.4 kg.]
SF22W	23-5/8" [600 mm]	3" [76 mm]	3" [76 mm]	Stainless Steel	10	9.1 lbs. [4.1 kg.]
SF25W	26-5/8" [676 mm]	3" [76 mm]	3" [76 mm]	Stainless Steel	10	11.8 lbs. [5.4 kg.]
SF28W	29-5/8" [752 mm]	3" [76 mm]	3" [76 mm]	Stainless Steel	10	13.9 lbs. [6.3 kg.]
SF31W	32-5/8" [829 mm]	3" [76 mm]	3" [76 mm]	Stainless Steel	10	14.5 lbs. [6.6 kg.]

Uses two - #8 x 1/2 screws (not included).

Download at www.kv.com > Resource Library

PSF11-W
(Without ring holder)
(Hinges not included)

PSF11RS-W
(Includes ring holder)
(Hinges not included)

Polymer Sink Front Trays

- 2" deep tray
- Designed for use with Scissor or Euro-Tray Hinges (Sold separately. See page 161.)
- For use with face frame or frameless (Euro-Style) cabinetry

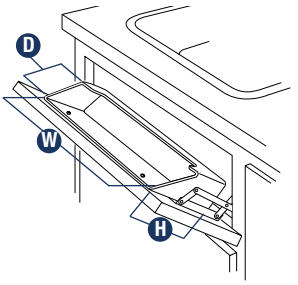

Polymer Sink Front Tray

Stock #	Width W	Height* H	Depth D	Finish	Ring Holder	Units per Carton	Weight per Carton
simplyput thoughtfully organized — POLYMER SINK FRONT TRAYS (FULL COLOR RETAIL PACKAGING)							
SP-PSF-11-SH1-W	11" [279 mm]	3" [76 mm]	2" [51 mm]	White	No	5	4.2 lbs. [1.9 kg.]
SP-PSF-14-SH1-W	14" [356 mm]	3" [76 mm]	2" [51 mm]	White	No	5	4.6 lbs. [2.1 kg.]
KV POLYMER SINK FRONT TRAYS							
PSF8.62-W	8-5/8" [219 mm]	3" [76 mm]	2" [51 mm]	White	No	10	2.9 lbs. [1.3 kg.]
PSF11-PF-W	11" [279 mm]	3" [76 mm]	1-5/8" [41 mm]	White	No	10	3.3 lbs. [1.5 kg.]
PSF11-W	11" [279 mm]	3" [76 mm]	2" [51 mm]	White	No	10	3 lbs. [1.4 kg.]
PSF11RS-W	11" [279 mm]	3" [76 mm]	2" [51 mm]	White	Yes	10	3.1 lbs. [1.4 kg.]
PSF14-PF-W	14" [356 mm]	3" [76 mm]	1-5/8" [41 mm]	White	No	10	3.6 lbs. [1.6 kg.]
PSF14-W	14" [356 mm]	3" [76 mm]	2" [51 mm]	White	No	10	3.5 lbs. [1.5 kg.]
PSF14RS-W	14" [356 mm]	3" [76 mm]	2" [51 mm]	White	Yes	10	3.6 lbs. [1.6 kg.]
PSF2425-W	24-3/8" [619 mm]	3" [76 mm]	2" [51 mm]	White	No	10	6.2 lbs. [2.8 kg.]
PSF3025-W	30-7/16" [773 mm]	3" [76 mm]	2" [51 mm]	White	No	10	7.2 lbs. [3.3 kg.]

Uses two - #8 x 1/2 screws (not included).

PSF14SH-2-W
(Hinges included)

PSF11SH-2-W
(Hinges included)

Kits include 2 pairs of Scissor Hinges (SH-10)

Polymer Sink Front Trays & Hinge Kits

- 1-5/8" deep tray is ideal for solid surface countertops with large deep sink applications
- For use with face frame or frameless (Euro-Style) cabinetry
- Two trays, two pairs of Scissor Hinges (SH-1) with hardware and instructions included

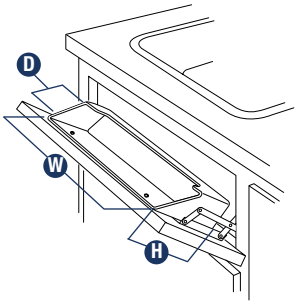

Polymer Sink Front Tray & Hinge Kit

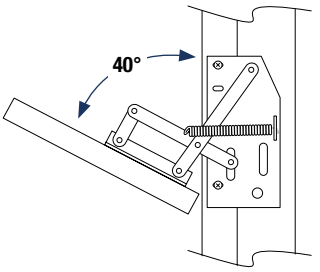

Scissor Hinge
(SH-10)

Stock #	Width W	Height* H	Depth D	Finish	Kits per Carton	Weight per Carton
POLYMER SINK FRONT TRAYS & HINGE KITS						
PSF11-PF-SH-2-W	11" [279 mm]	3" [76 mm]	1-5/8" [41 mm]	White	10	1.6 lbs. [0.7 kg.]
PSF11SH-2-W	11" [279 mm]	3" [76 mm]	2" [51 mm]	White	40	1.8 lbs. [0.8 kg.]
PSF14-PF-SH-2-W	14" [356 mm]	3" [76 mm]	1-5/8" [41 mm]	White	10	2.0 lbs. [0.9 kg.]
PSF14SH-2-W	14" [356 mm]	3" [76 mm]	2" [51 mm]	White	21	2.2 lbs. [1.0 kg.]

Polymer Sink Front Trays

(with stops)

- Designed for use with Scissor or Euro-Tray Hinges (Sold separately. See page 161.)
- For use with face frame or frameless (Euro-Style) cabinetry
- Built-in stops prevent items from tipping out

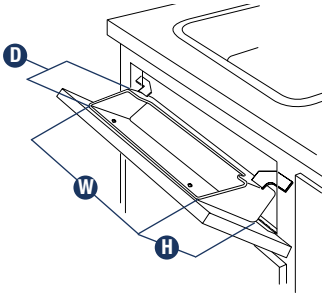

Polymer Sink Front Tray with Stops

Extruded Sink Front Trays

- Extruded Sink Front Tray (cut-to-fit 34" or 72" widths)
- For face frame or frameless (Euro-Style) cabinetry
- Designed for use with Scissor or Euro-Tray Hinges (Sold separately. See page 161.)
- Easy-to-clean, durable white PVC

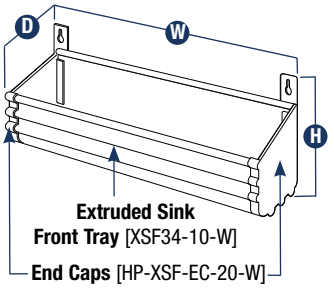

Stock #	Width W	Height* H	Depth D	Finish	Units per Carton	Weight per Carton
POLYMER SINK FRONT TRAYS WITH STOPS*						
PSF11W-W	12-3/8" [314 mm]	3" [76 mm]	2-3/4" [70 mm]	White	10	3.3 lbs. [1.5 kg.]
PSF14W-W	15-3/8" [391 mm]	3" [76 mm]	2-3/4" [70 mm]	White	10	3.6 lbs. [1.6 kg.]
EXTRUDED SINK FRONT TRAYS						
XSF34-10-W	33-3/4" [857 mm]	4" [102 mm]	2-1/8" [60 mm]	White	10	6.9 lbs. [3.1 kg.]
XSF72-10-W	72" [1,829 mm]	4" [102 mm]	2-1/8" [60 mm]	White	10	15.7 lbs. [7.1 kg.]
HP-XSF-EC-20-W	3/4" [19 mm]	4" [102 mm]	2-3/8" [60 mm]	White	20 pairs	2.2 lbs. [1 kg.]

Uses two - #8 x 1/2 screws (not included).

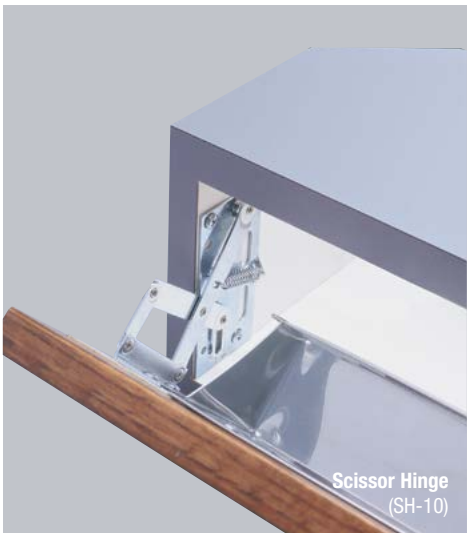

Scissor & Euro-Tray Hinges

- Scissor Hinges are spring-loaded and self-closing with internal stop
- For use with face frame or frameless (Euro-Style) cabinetry
- Mounting hardware and instructions included
- Not intended for full overlay or inset cabinet applications

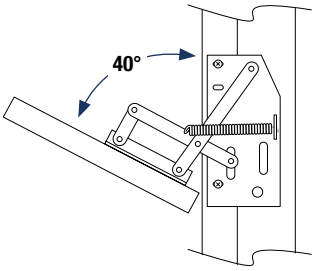

Scissor Hinge
(SH-10)

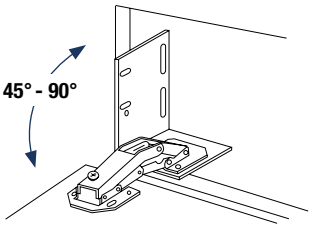

Euro-Tray Hinge
(ET-H-N)

Stock #	Width W	Height* H	Depth D	Finish	Units per Carton	Weight per Carton
SCISSOR HINGES						
SH-1-S/P	3-13/16" [97 mm]	2-7/8" [73 mm]	1-7/8" [48 mm]	Nickel-Plated	1 pair	1 lbs. [0.5 kg.]
SH-10	3-13/16" [97 mm]	2-7/8" [73 mm]	1-7/8" [48 mm]	Nickel-Plated	10 pair	5.1 lbs. [2.3 kg.]
SH-40	3-13/16" [97 mm]	2-7/8" [73 mm]	1-7/8" [48 mm]	Nickel-Plated	40 pair	20 lbs. [9.1 kg.]
EURO-TRAY HINGES						
ET-H-N	2-7/8" [73 mm]	3-3/4" [95 mm]	2-1/4" [57 mm]	Nickel-Plated	10 pair	6.4 lbs. [2.9 kg.]

Uses two - #8 x 1/2 screws (not included).

Cabinet Dimensions

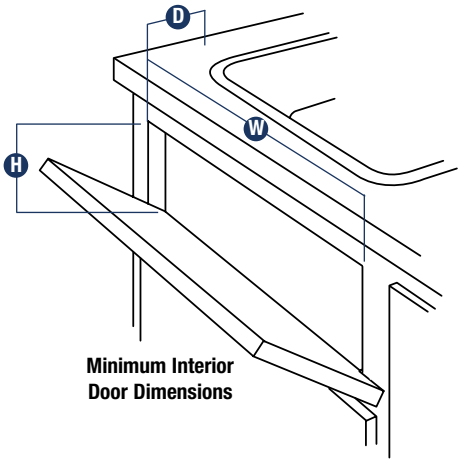

Stock #	Height H	Width W (Scissor Hinges)	Width W (Euro-Tray Hinges)	Depth D
POLYMER SINK FRONT TRAYS				
PSF8.62-W	3-1/2" [89 mm]	10-1/8" [257 mm]	12-7/8" [327 mm]	2-1/2" [64 mm]
PSF11-PF-W	3-1/2" [89 mm]	12-1/2" [318 mm]	15-1/4" [387 mm]	2-1/8" [54 mm]
PSF11-W	3-1/2" [89 mm]	12-1/2" [318 mm]	15-1/4" [387 mm]	2-1/2" [64 mm]
PSF11RS-W	3-1/2" [89 mm]	12-1/2" [318 mm]	15-1/4" [387 mm]	2-1/2" [64 mm]
PSF14-PF-W	3-1/2" [89 mm]	15-1/2" [394 mm]	18-1/4" [464 mm]	2-1/8" [54 mm]
PSF14-W	3-1/2" [89 mm]	15-1/2" [394 mm]	18-1/4" [464 mm]	2-1/2" [64 mm]
PSF14RS-W	3-1/2" [89 mm]	15-1/2" [394 mm]	18-1/4" [464 mm]	2-1/2" [64 mm]
PSF2425-W	3-1/2" [89 mm]	25-7/8" [657 mm]	28-5/8" [727 mm]	2-1/2" [64 mm]
PSF3025-W	3-1/2" [89 mm]	31-15/16" [811 mm]	34-11/16" [881 mm]	2-1/2" [64 mm]
EXTRUDED SINK FRONT TRAYS (DIMENSIONS INCLUDE HP-XSF-EC-20-W END CAPS)				
XSF34-10-W	4-1/2" [114 mm]	35-1/2" [902 mm]	38-1/4" [972 mm]	2-7/8" [114 mm]
XSF72-10-W	4-1/2" [114 mm]	73-3/4" [1,873 mm]	76-1/2" [1,943 mm]	2-7/8" [114 mm]

Stock #	Width W	Height* H	Depth D
STEEL SINK FRONT TRAYS (WITHOUT STOPS)			
SF10	3" [76 mm]	10-1/16" [256 mm]	2" [51 mm]
SF11	3" [76 mm]	11-5/16" [287 mm]	2" [51 mm]
SF13	3" [76 mm]	13-1/16" [332 mm]	2" [51 mm]
SF14	3" [76 mm]	14" [356 mm]	2" [51 mm]
SF16	3" [76 mm]	16-1/16" [408 mm]	2" [51 mm]
SF19	3" [76 mm]	19-1/16" [484 mm]	2" [51 mm]
SF22	3" [76 mm]	22-1/16" [560 mm]	2" [51 mm]
SF25	3" [76 mm]	25-1/16" [637 mm]	2" [51 mm]
SF28	3" [76 mm]	28-1/16" [713 mm]	2" [51 mm]
SF31	3" [76 mm]	31-1/16" [789 mm]	2" [51 mm]
STEEL SINK FRONT TRAYS (WITH STOPS)			
SF10W	3" [76 mm]	11-5/8" [295 mm]	3" [76 mm]
SF11W	3" [76 mm]	12-7/8" [327 mm]	3" [76 mm]
SF13W	3" [76 mm]	14-5/8" [371 mm]	3" [76 mm]
SF14W	3" [76 mm]	15-9/16" [395 mm]	3" [76 mm]
SF16W	3" [76 mm]	17-5/8" [448 mm]	3" [76 mm]
SF19W	3" [76 mm]	20-5/8" [524 mm]	3" [76 mm]
SF22W	3" [76 mm]	23-5/8" [600 mm]	3" [76 mm]
SF25W	3" [76 mm]	26-5/8" [676 mm]	3" [76 mm]
SF28W	3" [76 mm]	29-5/8" [752 mm]	3" [76 mm]
SF31W	3" [76 mm]	32-5/8" [829 mm]	3" [76 mm]
POLYMER SINK FRONT TRAYS & HINGE KITS (DIMENSIONS INCLUDE HINGE KITS)			
PSF11-PF-SH-2-W	3" [76 mm]	11" [279 mm]	1-5/8" [41 mm]
PSF11SH-2-W	3" [76 mm]	11" [279 mm]	2" [51 mm]
PSF14-PF-SH-2-W	3" [76 mm]	14" [356 mm]	1-5/8" [41 mm]
PSF14SH-2-W	3" [76 mm]	14" [356 mm]	2" [51 mm]
POLYMER SINK FRONT TRAYS WITH STOPS*			
PSF11W-W	3" [76 mm]	12-3/8" [314 mm]	2-3/4" [70 mm]
PSF14W-W	3" [76 mm]	15-3/8" [391 mm]	2-3/4" [70 mm]
SCISSOR HINGES			
SH-1-S/P	3-13/16" [97 mm]	2-7/8" [73 mm]	1-7/8" [48 mm]
SH-10	3-13/16" [97 mm]	2-7/8" [73 mm]	1-7/8" [48 mm]
SH-40	3-13/16" [97 mm]	2-7/8" [73 mm]	1-7/8" [48 mm]
EURO-TRAY HINGES			
ET-H-N	2-7/8" [73 mm]	3-3/4" [95 mm]	2-1/4" [57 mm]

Dimensions shown are recommended minimum interior drawer and door opening dimensions.
Minimum interior drawer dimensions allow for 1/8" clearance and 3/8" lip on all sides of drawer inserts.

Specialty Storage

Wine Accessories. 187
Tray Divider 188
Iron Holder 188
Cabinet Dimensions 189

Download at www.kv.com > Resource Library

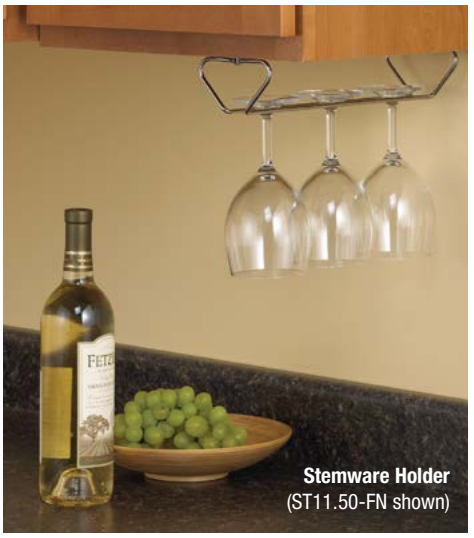

Stemware Holder
(ST11.50-FN shown)

Wine Accessories

- Economical and stemware displays

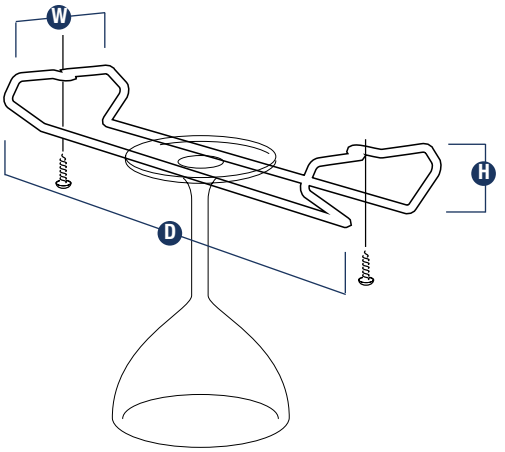

Stemware Holder

	Individual Product Dimensions						
Stock #	**Width W**	**Height H**	**Depth D**	**Number of Rings**	**Finish**	**Units per Carton**	**Weight per Carton**
STEMWARE HOLDERS							
ST11.50-C	4" [102 mm]	2" [51 mm]	11-9/16" [294 mm]	–	Chrome	10	3.5 lbs. [1.6 kg.]
ST11.50-FN	4" [102 mm]	2" [51 mm]	11-9/16" [294 mm]	–	Platinum	10	3.5 lbs. [1.6 kg.]

Tray Divider

- Available in 12" and 18" heights
- Installs easily with four attachment clips

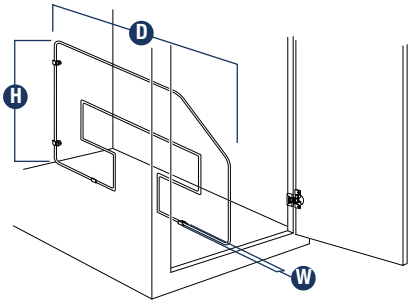

Iron Holder

- Can be installed on cabinet door above or below ironing board so iron will be readily available
- Conveniently stores iron when not in use

IH-FN

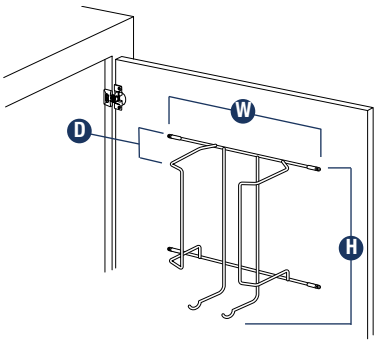

Stock #	Assembled Product Dimensions Width W	Height H	Depth D	Finish [Wire / Bin]	Units per Carton	Weight per Carton
TRAY DIVIDER						
TD12-1-FN	15/16" [24 mm]	12" [205 mm]	19-1/2" [495 mm]	Frosted Nickel	1	2 lbs. [0.9 kg.]
TD12-FN	15/16" [24 mm]	12" [205 mm]	19-1/2" [495 mm]	Frosted Nickel	10	14.1 lbs. [6.4 kg.]
TD18-1-FN	15/16" [24 mm]	18" [457 mm]	19-1/2" [495 mm]	Frosted Nickel	1	2.2 lbs. [1.0 kg.]
TD18-FN	15/16" [24 mm]	18" [457 mm]	19-1/2" [495 mm]	Frosted Nickel	10	17.2 lbs. [7.8 kg.]
TD12-W	15/16" [24 mm]	12" [205 mm]	19-1/2" [495 mm]	White	10	14.1 lbs. [6.4 kg.]
TD18-1-W	15/16" [24 mm]	18" [457 mm]	19-1/2" [495 mm]	White	1	2.2 lbs. [1.0 kg.]
TD18-W	15/16" [24 mm]	18" [457 mm]	19-1/2" [495 mm]	White	10	17.2 lbs. [7.8 kg.]
IRON HOLDER						
IH-FN	8-1/8" [206 mm]	8-5/16" [211 mm]	5-1/8" [130 mm]	Frosted Nickel	1	0.9 lbs. [0.4 kg.]

Cabinet Dimensions

	Minimum Interior Cabinet OR Door Opening Dimensions		
Stock #	**Width W**	**Height* H**	**Depth D**
STEMWARE HOLDERS			
ST11.50-FN	4-1/2" [114 mm]	2-1/2" [64 mm]	11-13/16" [300 mm]
TRAY DIVIDERS			
TD12-1-FN	–	12-3/8" [314 mm]	20-1/8" [511 mm]
TD12-FN	–	12-3/8" [314mm]	20-1/8" [511 mm]
TD18-1-FN	–	18-3/8" [467mm]	20-1/8" [511 mm]
TD18-FN	–	18-3/8" [467mm]	20-1/8" [511 mm]
TD12-W	–	12-3/8" [314mm]	20-1/8" [511 mm]
TD18-1-W	–	18-3/8" [467mm]	20-1/8" [511 mm]
TD18-W	–	18-3/8" [467mm]	20-1/8" [511 mm]
IRON HOLDER			
IH-FN	8-5/8" [219 mm]	length of iron + 1-1/2" [38 mm]	height of iron + 1" [25 mm]

Example of Face Frame Cabinet and Door Application

Top View

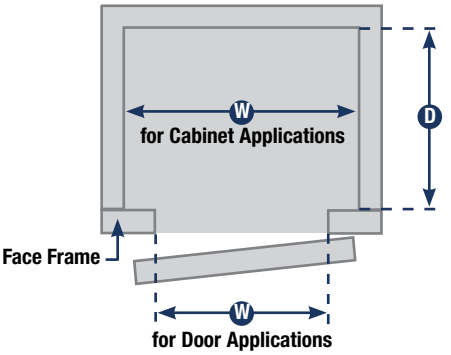

Front View

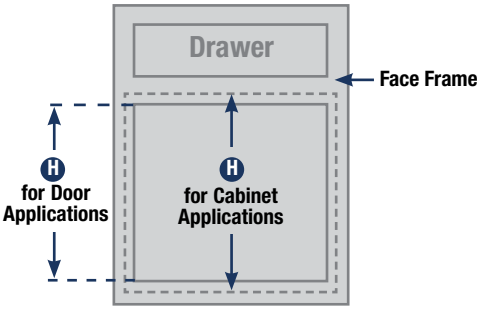

Example of Frameless / Euro-Style Cabinet and Door Application

Top View

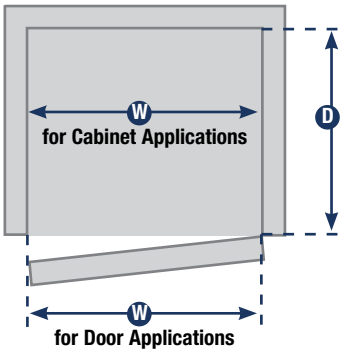

Front View

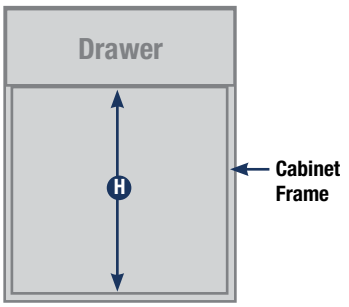

Dimensions shown are recommended minimum cabinet and door dimensions.

Garage Organization

Super Pro™ 96" x 48" Ceiling Storage Unit 191
Super Pro™ 96" x 24" Ceiling Storage Unit 192
HyLoft® 45" x 45" Ceiling Storage Unit 193
HyLoft® 60" x 45" Ceiling Storage Unit 194
HyLoft® 96" x 48" Ceiling Storage Unit 195
HyLoft® 34" x 26" Ceiling Storage Rack 196
HyLoft® Add-On Hook 197
HyLoft® Add-On Rack 197
HyLoft® 48" x 24" Wall Storage Unit (2-Shelf) 198
HyLoft® 45" x 15" Wall Storage Unit (2-Shelf) 199
HyLoft® 36" x 18" Wall Storage Unit (2-Shelf) 200
HyLoft® Heavy-Duty TireLoft™ 201
HyLoft® TireLoft™ 202
HyLoft® Folding TireLoft™ 203

Super Pro™ 96" x 48" Ceiling Storage Unit

- The Super Pro 96" X 48" Ceiling Storage Unit is the largest, strongest and most versatile ceiling-mounted storage unit on the market
- The unique design and floating rail system allow for installation in any garage, with any ceiling truss design, even on pitched ceilings. The down-rod supports can be installed anywhere along the 96" or 48" frame rail and adjust from 24" to 44" in height. Accommodates space-saving HyLoft® Add-On Hooks and Add-On Racks
- Made of strong, durable steel with attractive, scratch resistant finishes.
- Holds up to 600 lbs. evenly distributed
- This item ships in two cartons: One measures 5" x 49" x 5" and the second measures 96" x 3" x 3" and contains the rails

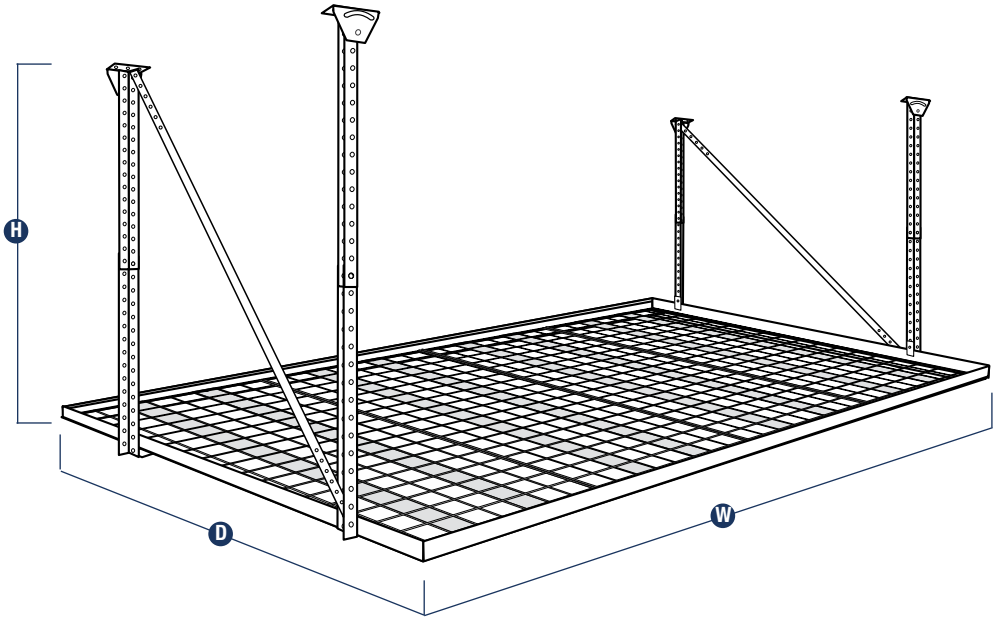

	Individual Product Dimensions					Weight per Cartons	
Stock #	Width W	Adjustable Height H	Depth D	Finish	Units per Carton	Carton 1	Carton 2
SUPER PRO 96" X 48" CEILING STORAGE UNIT							
00164	96" [243.8cm]	24"–44" [61.0–111.8cm]	24" [61cm]	White	1	21 lbs. [9.5 kg.]	70 lbs. [31.8 kg.]
00199	96" [243.8cm]	24"–44" [61.0–111.8cm]	24" [61cm]	Hammertone	1	21 lbs. [9.5 kg.]	70 lbs. [31.8 kg.]

Super Pro™ 96" x 24" Ceiling Storage Unit

- The Super Pro 96" X 24" Ceiling Storage Unit is intended for tight areas with a minimum of 24" of space
- The unique design and floating rail system allow for fast installation and the ability to install in any garage, even on pitched ceilings. The down-rod supports can be installed anywhere along the 96" or 24" frame rails and adjust from 24" to 44" in height. Accommodates space-saving HyLoft® Add-on Hooks
- Made of durable steel with an attractive, scratch resistant powder coat finish in white
- Holds up to 300 lbs. evenly distributed
- This item ships in two cartons: one measures 25" x 49" x 5" and the second measures 96" x 3" x 3" and contains the rails

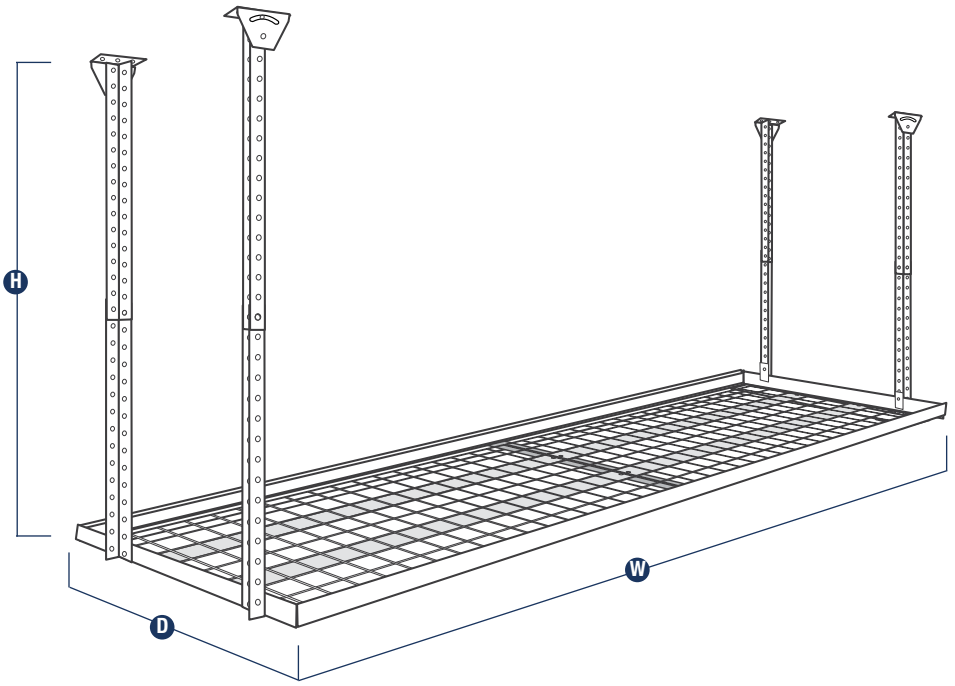

	Individual Product Dimensions					Weight per Cartons	
Stock #	Width W	Adjustable Height H	Depth D	Finish	Units per Carton	Carton 1	Carton 2
SUPER PRO 96" X 24" CEILING STORAGE UNIT							
00181	96" [243.8cm]	24"–44" [61.0–111.8cm]	24" [61cm]	White	1	21 lbs. [9.5 kg.]	44 lbs. [20 kg.]

Download at www.kv.com > Resource Library

HyLoft®
45" x 45" Ceiling Storage Unit

- The 45" x 45" Ceiling Storage Unit is ideal for storing large, bulky items like holiday decorations, luggage, coolers and more
- Add it to the garage, basement, attic, closet, office or any place you need extra storage
- Height adjustable from 17" to 28" and accommodates all space-saving HyLoft accessories
- Made of strong, durable steel with attractive, scratch resistant finishes
- Holds up to 250 lbs. evenly distributed
- Product design includes adjustability for easy installation on both flat and vaulted ceiling trusses
- This product is 75% pre-assembled to make installation that much easier
- Provides over 30 cubic feet of storage space

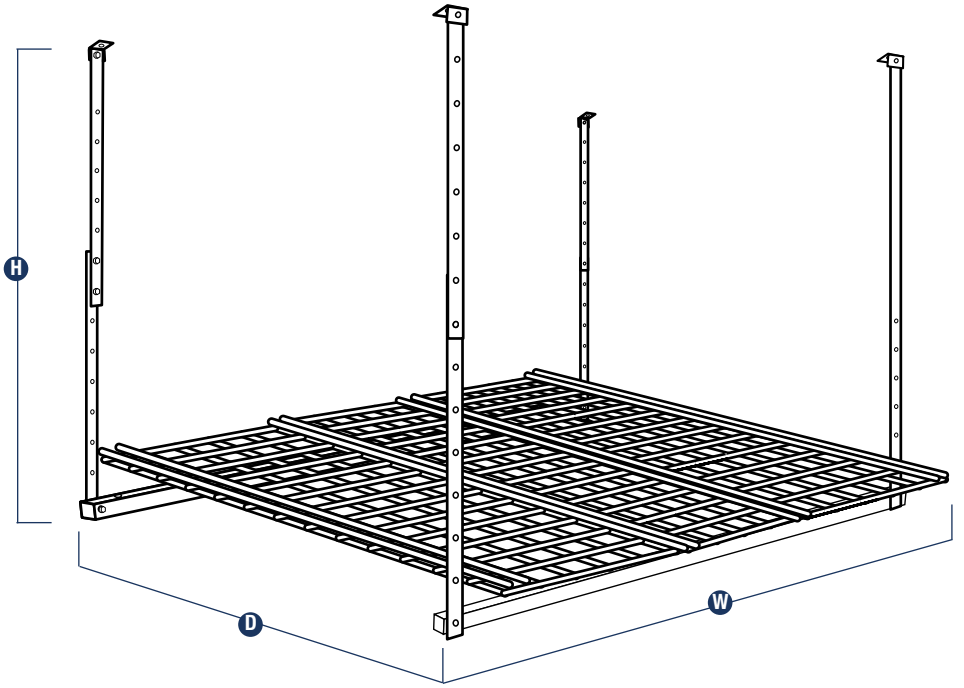

	Individual Product Dimensions					
Stock #	Width W	Adjustable Height H	Depth D	Finish	Units per Carton	Weight per Carton
45" X 45" CEILING STORAGE UNIT						
00540	45" [114.3cm]	17"–28" [43.2cm–71.1cm]	45" [114.3cm]	White	1	26 lbs. [12.7 kg.]
00625	45" [114.3cm]	17"–28" [43.2cm–71.1cm]	45" [114.3cm]	Hammertone	1	26 lbs. [12.7 kg.]

HyLoft®
60" x 45" Ceiling Storage Unit

- The 60" x 45" Ceiling Storage Unit is is ideal for storing large, bulky items like holiday decorations, luggage, coolers and more. Add it to the garage, basement, attic, closet, office or any place you need extra storage
- It's height adjustable from 31" to 41" and accommodates space-saving HyLoft® Add-On Hooks and Add-On Racks
- Made of durable steel with an attractive, scratch resistant powder coat finish
- Holds up to 300 lbs. evenly distributed
- Provides over 64 cubic feet of storage space

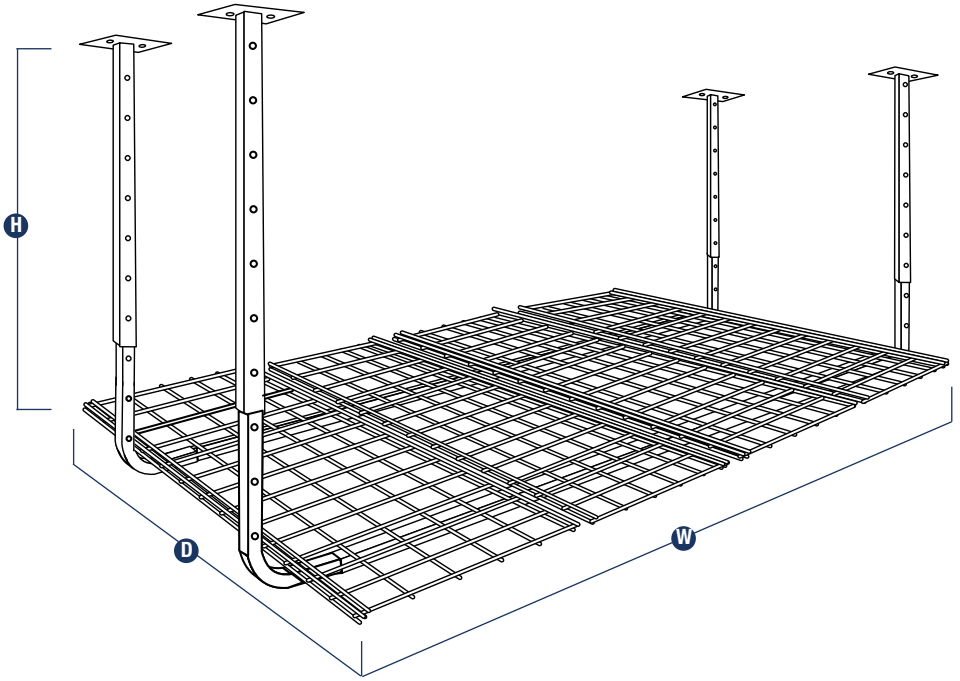

		Individual Product Dimensions				
Stock #	Width W	Adjustable Height H	Depth D	Finish	Units per Carton	Weight per Carton
60" X 45" CEILING STORAGE UNIT						
50175-10	60" [51.4cm]	31"–41" [76.2cm–104.1cm]	45" [114.3cm]	White	1	46 lbs. [20.9 kg.]

HyLoft®
96" x 48" Ceiling Storage Unit

- The HyLoft 48" x 96" Ceiling Storage Unit features a unique design and floating rail system that allows for fast installation
- The down-rod supports can be installed anywhere along the 96" or 24" frame rails and are height-adjustable from 24" to 44"
- Space-saving HyLoft Add-on Storage Hooks can be used with this item for increased storage and organization
- HyLoft's unique storage system units can be strategically placed throughout your garage, basement, attic, in closets, offices or any other room that in need of more storage in order to fully utilize available space
- Made of durable steel with an attractive, scratch-resistant black powder coated finish
- Holds up to 300 lbs. evenly distributed
- Provides over 117 cubic feet of storage space
- Product design includes adjustability for easy installation on both flat and vaulted ceilings
- Patented design

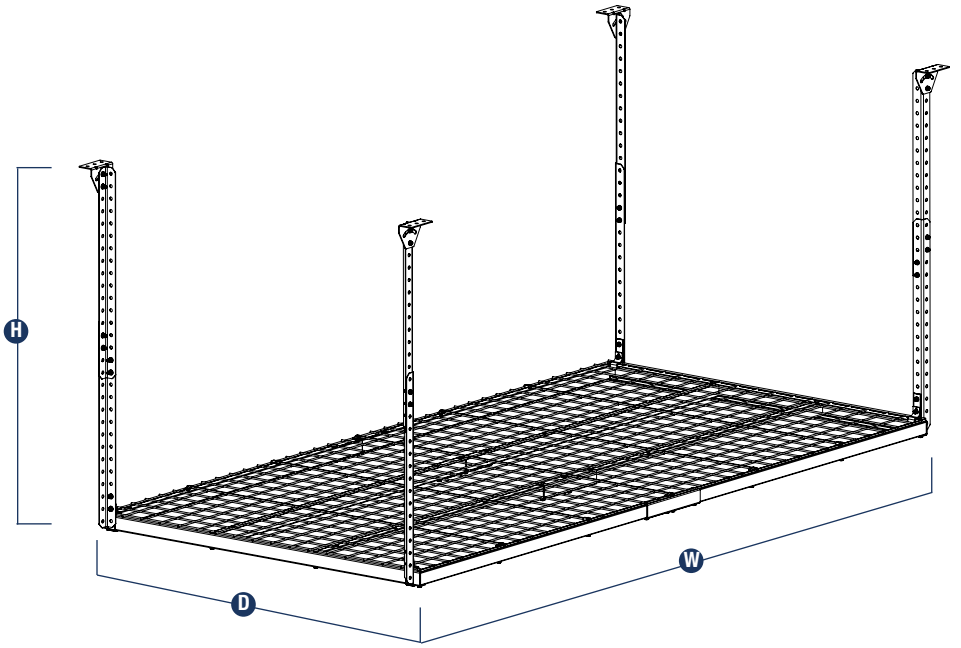

		Individual Product Dimensions				
Stock #	Width W	Adjustable Height H	Depth D	Finish	Units per Carton	Weight per Carton
96" X 48" CEILING STORAGE UNIT						
00163-BLK	96" [243.8cm]	24"–44" [61.0mm–111.8cm]	48" [121.9mm]	Black	1	76 lbs. [34.5 kg.]

HyLoft®
34" x 26" Ceiling Storage Rack

- The adjustable 34" x 26" Ceiling Storage Rack Provides easy out-of-the-way storage for long-handled tools, lumber, kayaks and more
- Commonly used in the garage, basement, attic, under decks and porches or any place you need extra storage
- These units adjust to accommodate any ceiling joist configuration and can be used with or without a platform (not included)
- The rack is width adjustable from 24" to 34" and height adjustable from 17" to 26"
- With its unique ceiling mount, the rack also can be attached to an existing HyLoft® Ceiling Storage Unit, creating a second tier of storage
- Made of durable steel with an attractive, scratch resistant powder coat finish
- Holds up to 200 lbs. per pair of racks

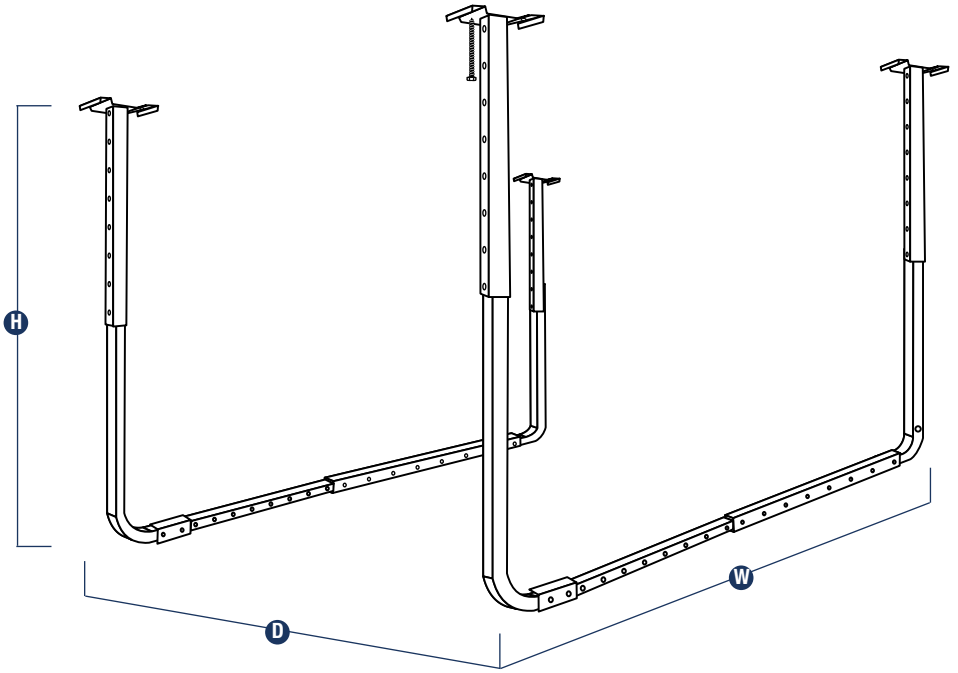

	Individual Product Dimensions					
Stock #	Adjustable Width W	Adjustable Height H	Depth D	Finish	Units per Carton	Weight per Carton
34" X 26" CEILING STORAGE RACK						
80842-10	24"–34" [61.0–86.4cm]	17"–26" [43.2cm–66.0cm]	Variable	White	1	61 lbs. [27.7 kg.]
80844-10	24"–34" [61.0–86.4cm]	17"–26" [43.2cm–66.0cm]	Variable	Hammertone	1	61 lbs. [27.7 kg.]

HyLoft®
Add-On Hook

- Add-On Hooks provide endless ways to maximize storage space and keep miscellaneous items off the floor and out of the way with HyLoft® Ceiling and Wall Storage Units
- Hang bikes, tools, sporting goods, lawn chairs and much more
- No tools are required for instant strong, safe and secure storage
- Made of strong, durable steel with attractive, scratch resistant finishes
- Sold in packs of 4 hooks

HyLoft®
Add-On Rack

- Add-on Racks provide endless ways to maximize storage space and keep miscellaneous items off the floor and out of the way with HyLoft® Ceiling and Wall Storage Units
- Store tools, skis and other sporting goods, lumber and much more
- No tools are required for instant strong, safe and secure storage
- Made of strong, durable steel with attractive, scratch resistant finish
- Sold in pair packs

	Individual Product Dimensions					
Stock #	Width W	Height H	Depth D	Finish	Units per Carton	Weight per Carton
ADD-ON HOOK						
00212	.4" [1cm]	7.4" [18.8cm]	3.9" [9.9cm]	White	10 sets of 4 hooks	1.4 lbs. [.64 kg.]
00682	.4" [1cm]	7.4" [18.8cm]	3.9" [9.9cm]	Hammertone	10 sets of 4 hooks	1.4 lbs. [.64 kg.]
ADD-ON RACK						
00656	32" [81.3cm]	10" [25.4cm]	.3" [.76cm]	Hammertone	5 pairs	4.3 lbs. [2 kg.]

HyLoft®
48" x 24" Wall Storage Unit (2-Shelf)

- The 48" x 24" Wall Storage Unit makes the most of that unused wall space in the garage, closet, basement, laundry room, shed and more
- Shelves can be installed stacked or side by side on finished or unfinished walls
- Low-profile brackets increase storage area
- Made of durable steel with an attractive, scratch resistant powder coated white finish
- Compatible with all HyLoft® accessories
- Stores up to 150 lbs. per shelf
- Kit includes two shelves and four mounting brackets

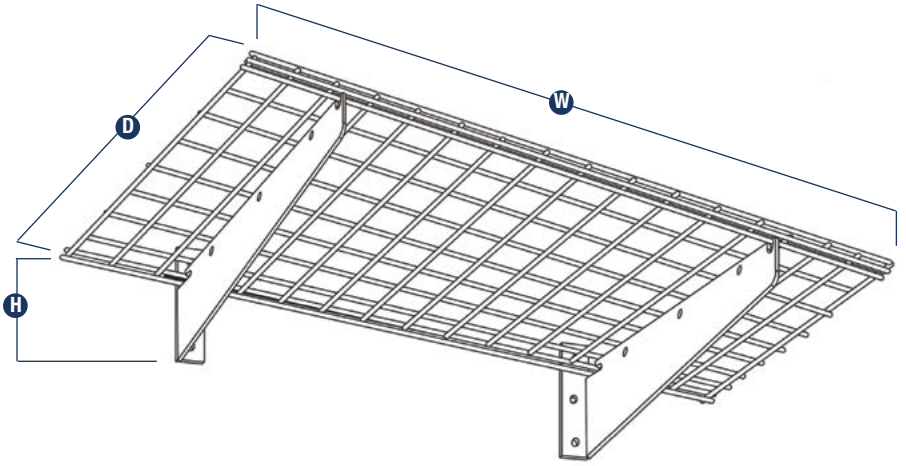

	Individual Product Dimensions					
Stock #	Width W	Height H	Depth D	Finish	Units per Carton	Weight per Carton
48" X 24" WALL STORAGE UNIT (2-SHELF)						
00630	48" [121.9cm]	5.5" [14cm]	24" [cm]	White	1	31 lbs. [14.1kg.]

HyLoft®
45" x 15" Wall Storage Unit (2-Shelf)

- The 45" x 15" Wall Storage Unit makes the most of that unused wall space in the garage, closet, basement, laundry room, shed and more
- Shelves can be installed side by side or stacked on finished or unfinished walls. Low-profile brackets increase storage area
- Made of durable steel with attractive, scratch resistant finishes
- Compatible with all HyLoft® accessories
- Stores up to 200 lbs. per shelf
- Kit includes two shelves and four mounting brackets

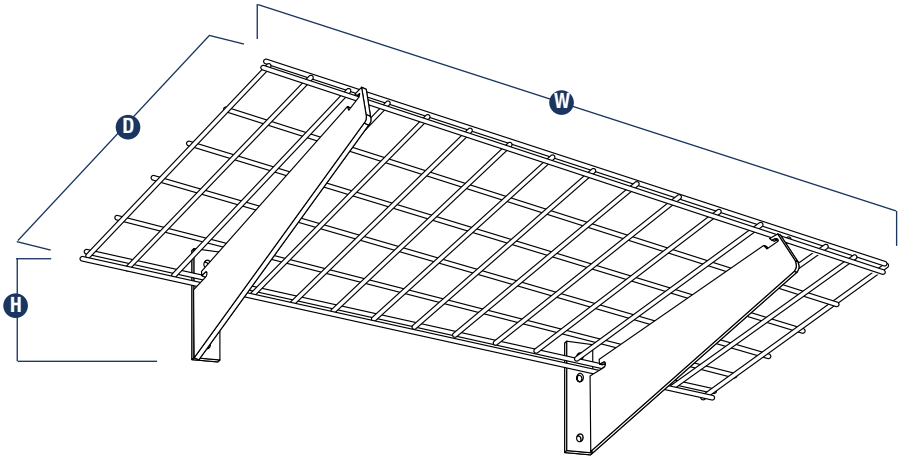

	Individual Product Dimensions					
Stock #	Width W	Height H	Depth D	Finish	Units per Carton	Weight per Carton
45" X 15" WALL STORAGE UNIT (2-SHELF)						
00967	45" [114.3cm]	5.5" [14cm]	15" [38.1cm]	White	1	25 lbs. [11.3 kg.]
00651	45" [114.3cm]	5.5" [14cm]	15" [38.1cm]	Hammertone	1	25 lbs. [11.3 kg.]

HyLoft®
36" x 18" Wall Storage Unit (2-Shelf)

- The 36" x 18" Wall Storage Unit makes the most of that unused wall space in the garage, closet, basement, laundry room, shed and more
- Shelves can be installed stacked or side by side on finished or unfinished walls. Low-profile brackets increase storage area and removable clothing rod builds in versatility
- Hang rods provide additional convenient storage capability
- Made of durable steel with an attractive, scratch resistant power coated
- Compatible with all HyLoft® accessories
- Stores up to 150 lbs. per shelf
- Kit includes two shelves, four mounting brackets and two hang rods

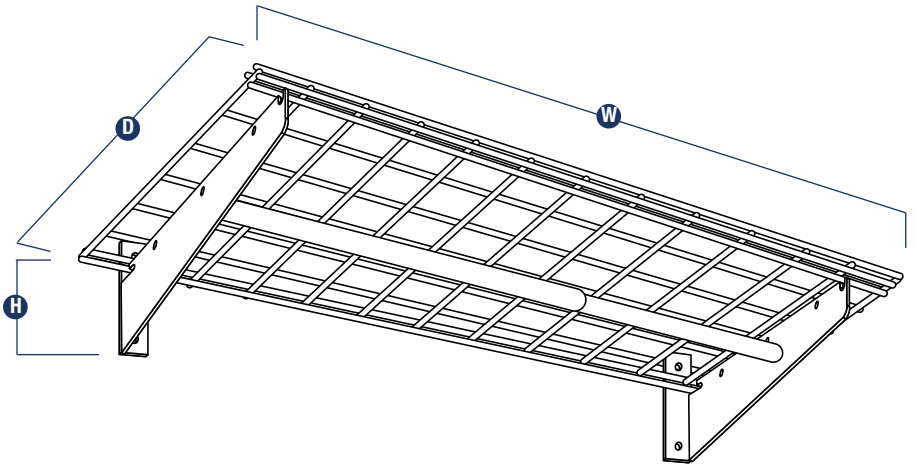

	Individual Product Dimensions					
Stock #	Width W	Height H	Depth D	Finish	Units per Carton	Weight per Carton
36" X 18" WALL STORAGE UNIT (2-SHELF)						
00777	36" [91.4cm]	5.5" [14cm]	18" [45.7cm]	White	1	24 lbs. [10.9kg.]

HyLoft®
Heavy-Duty TireLoft™

- The Heavy-Duty TireLoft™, multi-tire storage unit is a great solution for storing all types of auto and truck tires and seasonal or recreational tires, ATV tires, race tires and wheels
- Installation is simple: The Master Rail™ attaches to the wall studs on finished or unfinished walls and the support frames attach into the Master Rail. The support frames can then slide left and right (even after installation)
- The TireLoft accommodates various tire sizes as the telescopic chrome tubes can be adjusted in width and depth
- The TireLoft is made entirely of strong, durable steel and adjustable width from 34" to 58". Black finish with chrome support tubes
- Weight load capacity up to 400 lbs

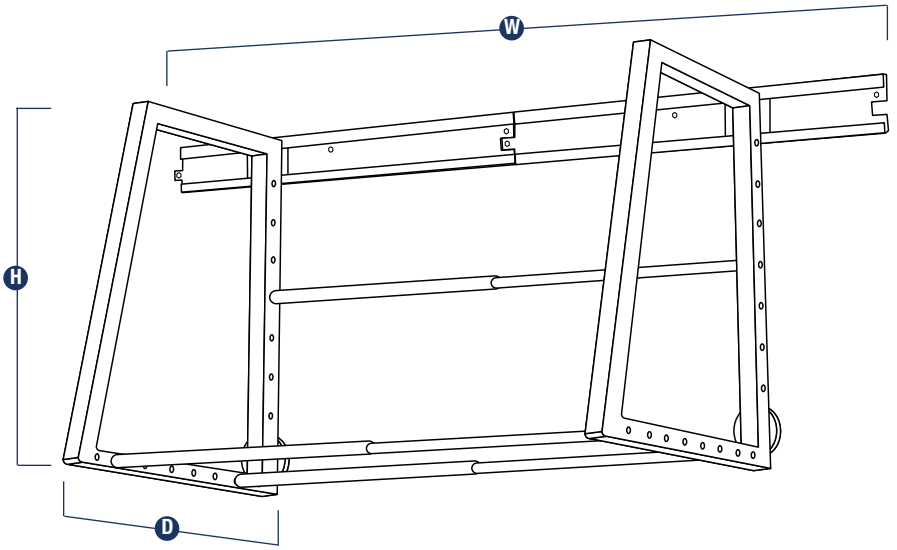

	Individual Product Dimensions					
Stock #	Adjustable Width W	Height H	Depth D	Finish	Units per Carton	Weight per Carton
HEAVY-DUTY TIRELOFT						
01000	34"–58" [86.4–147.3cm]	28.2" [71.6cm]	28.1" [71.4cm]	Black / Chrome	1	50 lbs. [22.7 kg.]

HyLoft® TireLoft™

- The TireLoft™ is a great solution for storing all types of tires; auto, truck or seasonal. Also ideal for recreational tires such as motorcycle, ATV tires and racing tires and wheels
- The installation is quick and simple: The two steel end frames attach directly to the wall studs on finished or unfinished walls
- The TireLoft is made entirely of strong, powder coated steel and will accommodate up to four large tires
- Can be mounted at adjustable widths of 36" or 48" and features a red finish with silver support tubes
- Weight load capacity up to 375 lbs

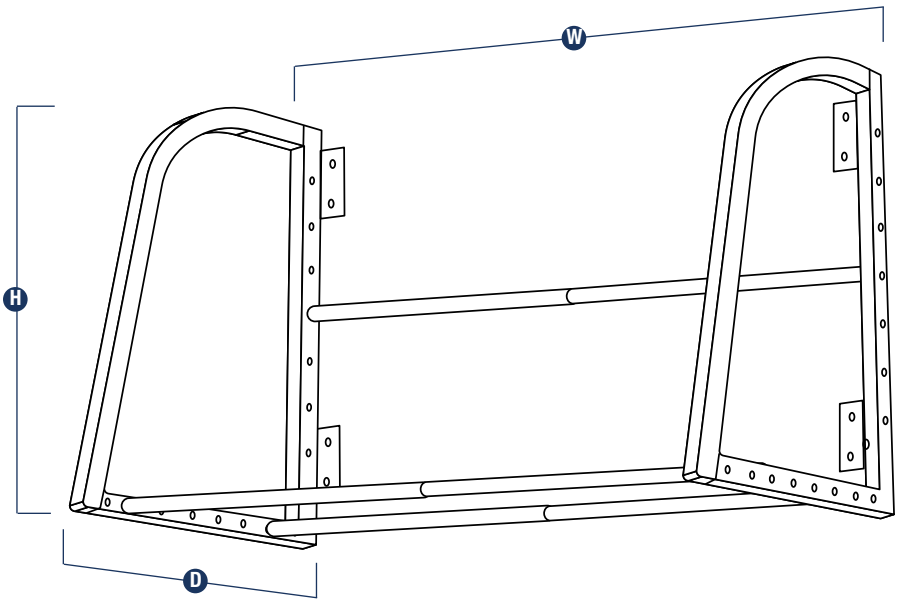

	Individual Product Dimensions					
Stock #	Adjustable Width W	Height H	Depth D	Finish	Units per Carton	Weight per Carton
HEAVY-DUTY TIRELOFT						
01012	36"–48" [91.4–121.9cm]	28" [71.1cm]	28.1" [71.4cm]	Red	1	27 lbs. [12.2 kg.]

HyLoft®
Folding TireLoft™

- The Folding TireLoft is the ultimate tire storage solution, combining durability with flexibility. The unit folds up against the wall when not in use, it's perfect for storing seasonal tires, RV tires, ATV tires and more
- Its adjustable mounting width of 32" to 48" easily accommodates four standard vehicle tires
- The Folding TireLoft is lightweight, easily installed and available in a scratch-resistant silver powder-coated finish
- It is made entirely of durable steel tubing and holds up to 300 lbs

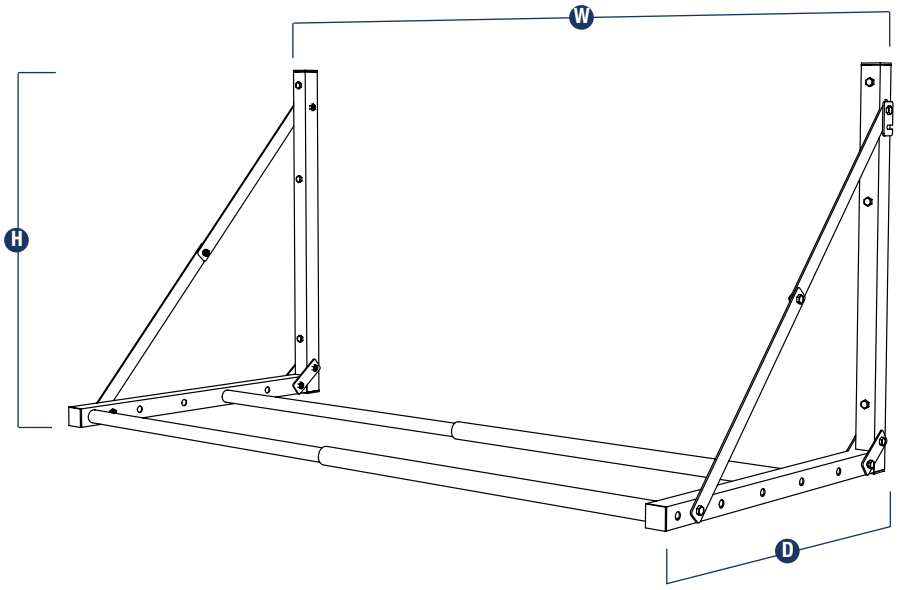

	Individual Product Dimensions					
Stock #	Adjustable Width W	Height H	Depth D	Finish	Units per Carton	Weight per Carton
FOLDING TIRELOFT						
01031	32"–48" [81.3–121.9cm]	24.4" [62cm]	22.5" [57.2cm]	Silver	1	17 lbs. [7.7 kg.]

Index

Index
4x4 Pocket Door Full Overlay Kit 58
0019 139
0035 110
0036 110
71 92
80 93
80-88DP 94
82 97
82DP 88, 97
83 99
85 101
87 103, 105
87-10 104
101 10, 96
102 96
103 96
103-1/2L 96
103-1/2R 96
104 96
104-1/2 96
106 88, 101, 130
107 88, 101
113L 99, 101
113R 99, 101
0117 110
0118 110
119 96, 99, 104
129 96, 101, 104
134 99
135 99
136 96
137 96
154 96
159LL 99, 101
160LL 95
161LL 88, 100
00163-BLK 195
00164 191
170 92
179 95
180 94
181 95, 192
182 98
182BE 88, 97
182DP 88, 97
183 100
185 102
186LL 104
186LL SS 106
187LL 104
187LL SS 106
191 99, 101
192 99, 101
00199 191
200 113, 114
201 111
206 109
208 109
210 104
211 104
212 104
213C 104
215 110
217 110
221 109
229 90
233 91
237 91
238 91
239 90
242 91
243 90
244 90
255 89
255-81N 91
256 90
266 118
268 118
277 118
278 118
288 118
0300-KITA 142
306 118
309 118
318 118
320 120
0321 139
0321-CVR 139
323 120, 139
324 120
325 108
326 107
330 107, 141
331 108, 141
332 107
333 108
335 108
0335-BSKT 140
0335-PRK 140
0335-SRK 140
0335-SRND 140
338 107
339 107, 141
340 107
341 120
342 120
345 107
346 108
348 107
400A 123
402 123
420 122
422 122
423 122
424 122
427 123
429 123
430 123
455 124
467 124
469 124
472 120
475F 119
476F 119
476T 119
510 120
513 120
516 120
517 120
521 120
00540 193
580 123
582 123
592 123
594 123
607 123
620 123
00625 193
00630 198
632 131
00651 199
660 130
700 Series 32
701 119
704 119
730 131
731 131
732 131
734 131
735 131
750 130
753 138
757 90, 131
760 131
764 131
766 131
770 130
00777 200
800 Series 31
801X 117
803X 117
813 117
819X 119
836 117
880 132
881 132
900 Series 30
901 117
903 117
905 117
918 117
953 124, 125
962KA 122
963KA 122
965 122
00967 199
984KA 122
986 119
989 118
993 125
995 125
997 125
999 125
01000 201
01012 202
01031 203
1085 127
1087 127
1088 117, 127
1093 126
1095 126
1096 126
1097 127
1098 127
1099 126
1132 137
1175 8
1194 134
1195 134
1300 9
1303 9
1547 120
1548 120
1805 10
1980 115
1987 103
1987 SS 105
2038 137
2070 29
4101B 12, 13
4104B 12, 13
4400 12
4450 13
4500 27
6092 118
6094 118
6300 46
6340 RB 46, 47
6400 47
6500 34
6505 34
6875 118
8000 48
8050 53
8070 55
8071 55
8072 55
8080 56
8081 56
8082 56
8085 55, 56, 57
8086 55, 56, 57, 59
8090P 55, 56, 57
8091 57
8092 57
8150 51
8157 51
8250 52
8350 11
8400 15–16
8400RV 20
8401 16, 17, 18, 19
8402 16, 17, 18, 19
8403 16, 17, 18, 19, 20, 22
8404 16, 17, 18, 19, 20, 22
8405 17
8407 18
8414 19
8417 20
8419 20
8420 21
8425 21
8450FM 22
8455FM 22
8500 35
8500-93 9, 11, 16, 17, 18, 19, 22, 23, 24, 25, 26, 27, 35, 36, 49, 51, 52, 53
8500T 49
8505 35
8520 36
8525 36
8600 37
8605 37
8620 38
8625 38
8650FM 39
8655FM 39
8810 40
8815 40
8820 41, 42
8825 41
8850FM 42
8900 43
8908 44
24276 90
29201 133
50175-10 194
80842-10 196
80844-10 196
Alphabox 83
BCUS-LR-15-CH 160, 169
CD-0300 139, 141
DWB975-W 155, 157
ET-H-N 184, 185
Flowbox 79, 80, 81, 82
Gas Spring Lifter 77
GS2070 29
GS4205 23
GS4260 24
GS4270 25
GS4340 23, 24, 25
HAL-20 168, 169

Download at www.kv.com > Resource Library

Index

HAL-BSKT 168
HN-K-TEL-PT 174
HP-XSF-EC-20-W 183, 185
HUB-PIN 174
IH-FN 188, 189
Jetfix 128
KT-0119 139
KV1 138
KV2 133
KV Hinge 62, 72, 73
KVSFB 128
KVSUMB B 102 30, 31, 32
KVSUMB DT 100 31, 32
KVSUMB DT 101 31, 32
KVSUMB LL 106 30, 31, 32
KVSUMB LLN 105 30, 31, 32
KVSUMB LR 105 30, 31, 32
KVSUMB LRN 105 30, 31, 32
Master 62, 64
Mini Star 70
Mounting Plate 74
P793 138
P793 ANO 169
P992 125
P1092 126
P2413 121, 128
P2417 121
P2419 121
P2421 121
PDMKTPT 154
PDMTM12-1-35WH 151, 156, 157
PDMTM15-2-35WH 151, 156, 158
PDMTM18-2-35WH 151, 156, 158
PDMTM21-2-35WH 151, 156, 158
PDMTM115-1-35WH 151, 156, 157
PDMTM145-1-50WH 151, 156, 157
PDMTM175-2-35WH 151, 156, 158
Performa Lid Stay 77
PFN18S3T-W 171
PFN18ST-W 171
PFN20S3T-W 171
PFN20ST-W 171
PFN24ST-W 171
PFN28SBT-W 171
PFN28ST-W 171
PFN32ST-W 171
PHM28GG-W 173, 176
PHM28PG-W 173, 176
PHM28PP-W 173, 176
PHM34GG-W 173, 176
PHM34PG-W 173, 176
PHM40GG-W 173, 176
PHM40PG-W 173, 176
PKN18ST-W 172, 175
PKN24ST-W 172, 175
PKN28SBT-W 172
PKN28ST-W 172, 175
PKN32ST-W 172, 175
PKV3 137
PNP-DVDR 161
PPN24S-W 172, 176
PPN28S-W 172, 176
PSF8.62-W 181, 185
PSF11-PF-SH-2-W 182, 185
PSF11-PF-W 181, 185
PSF11RS-W 181, 185
PSF11SH-2-W 182, 185
PSF11-W 181, 185
PSF11W-W 183, 185
PSF14-PF-SH-2-W 182, 185
PSF14-PF-W 181, 185
PSF14RS-W 181, 185
PSF14SH-2-W 182, 185
PSF14-W 181, 185
PSF14W-W 183, 185
PSF2425-W 181, 185
PSF3025-W 181, 185
QT20LB-PT 156
QT20LB-WH 156
QT20PB-PT 156
QT20PB-WH 156
QT27PB-PT 156
QT27PB-W 156
QT32PB-W 156
QT35LB-PT 156
QT35LB-W 148
QT35LB-WH 156
QT35PB-PT 156
QT35PB-WH 156
QT50PB-P 156
QT50PB-W 156
Rollbox 85
RP0020 133
RP-0042 134
RP-0043 134
RP-0044 134
RP-0045 134
RP-0046 136
RP-0052 134
RP-0495 135
RP-0496 135
RRC28K-W 155, 156
Salice Hinge Kits 59
Sam Box 86
Samfix 128
SBM9-1-20WH 152, 156, 157
SBM10-1-35WH 152, 156, 157
SBM12-1-50WH 152, 156, 157
SBM12-2-27WH 152, 156, 158
SBM15-1-35WH 152, 156, 157
SBM15-2-20WH 152, 156, 158
SBM15-2-35WH 152, 156, 158
SCB9-1-20PT 150, 156, 157
SCB9-1-20WH 150, 156, 157
SCB10-1-35PT 150, 156, 157
SCB10-1-35WH 150, 156, 157
SCB12-1-50PT 150, 156, 157
SCB12-1-50WH 150, 156, 157
SCB12-2-27PT 150, 156, 158
SCB12-2-27WH 150, 156, 158
SCB15-1-20PT 150, 156, 157
SCB15-1-20WH 150, 156, 157
SCB15-2-20PT 150, 156, 158
SCB15-2-20WH 150, 156, 158
SCB15-2-35PT 150, 156, 158
SCB15-2-35WH 150, 156, 158
SF10 180, 185
SF10W 180, 185
SF11 180, 185
SF11W 180, 185
SF13 180, 185
SF13W 180, 185
SF14 180, 185
SF14W 180, 185
SF16 180, 185
SF16W 180, 185
SF19 180, 185
SF19W 180, 185
SF22 180, 185
SF22W 180, 185
SF25 180, 185
SF25W 180, 185
SF28 180, 185
SF28W 180, 185
SF31 180, 185
SF31W 180, 185
SH-1-S/P 184, 185
SH-10 182, 184, 185
SH-40 184, 185
Smart Box 84
SMT 75T 128
Solo Mech 76
SP-BSC10-1-35-P 150, 153
SP-BSC12-2-27-P 150
SP-BSC15-2-35-P 150
SP-CLEANBSKT-FN 167
SP-DBMUBSC-8-FN 164
SP-DBMUBSC-11-FN 164
SP-DBMUBSC-14-FN 164
SP-DBMUBSC-17-FN 164
SP-DBMUBSC-20-FN 164
SP-MUB-14-W 165
SP-MUBSC-11-FN 163
SP-MUBSC-14-FN 163
SP-MUBSC-17-FN 163
SP-MUBSC-20-FN 163
SP-PNP-11-FN 161
SP-PNP-20-FN 161
SP-PSF-11-SH1-W 181
SP-PSF-14-SH1-W 181
SPS21-FN 161, 169
SPS27-FN 161, 169
SP-WMUB-14-WD 166
ST11.50-B 187
ST11.50-FN 187, 189
Star 62, 66
Star Track 62, 68
Supreme 62, 63
TD12-1-FN 188, 189
TD12-FN 188, 189
TD12-W 188, 189
TD18-1-FN 188, 189
TD18-1-W 188, 189
TD18-FN 188, 189
TD18-W 188, 189
TDR06-W 162, 169
TDR09-W 162, 169
TDRO-FNW-6 162, 169
TDRO-FNW-9 162, 169
TSC12-1-35PT 149, 156, 157
TSC12-1-35WH 149, 156, 157
TSC15-1-35PT 149, 156, 157
TSC15-1-35WH 149, 156, 157
TSC15-1-50PT 149, 156, 157
TSC15-1-50WH 149, 156, 157
TSC15-2-35PT 149, 156, 158
TSC15-2-35WH 149, 156, 158
TSC18-2-35PT 149, 156, 158
TSC18-2-35WH 149, 156, 158
TT100 26
TT401 26
TT401B 26
USC12-1-35PT 148, 156, 157
USC12-1-35WH 148, 156, 157
USC12-1-50PT 148, 156, 157
USC12-1-50WH 148, 156, 157
USC12-2-27PT 148, 156, 158
USC12-2-27WH 148, 156, 158
USC15-2-35PT 148, 156, 158
USC15-2-35WH 148, 156, 158
USC18-2-50PT 148, 156, 158
USC18-2-50WH 148, 156, 158
WUSC12-1-35PT 147, 157
WUSC12-1-35WH 147, 157
WUSC12-1-50PT 147, 157
WUSC12-1-50WH 147, 157
WUSC12-2-27PT 147, 158
WUSC12-2-27WH 147, 158
WUSC15-2-35PT 147, 158
WUSC15-2-35WH 147, 158
WUSC18-2-50PT 147, 158
WUSC18-2-50WH 147, 158
XSF34-10-W 183, 185
XSF72-10-W 183, 185

Knape and Vogt Limited Warranty

Limited Lifetime Warranty for Commercial Business Products

This warranty is given to the initial purchaser of new commercial products purchased from Knape & Vogt Manufacturing Company. The warranty covers defects in materials and workmanship. The warranty does not apply to defects resulting from misuse, damage or abuse, normal wear and tear, accident, modification, improper installation or maintenance, third party materials or damage during shipping. The warranty is not transferable and does not cover any subsequent purchasers of the products.

During the warranty period, Knape & Vogt, will, at its option, repair or replace any defective product with a comparable product or component. This limited warranty is for repair or replacement of defective products only and does not cover any other costs such as removal, installation, or other related expenses.

For warranty service, please contact Knape & Vogt Manufacturing Company, 2700 Oak Industrial Drive, Grand Rapids, MI 49505, Attention: Customer Service. Information regarding the claimed defect and date of purchase of the product must be provided. Any defective product must be returned postage or freight prepaid to Knape & Vogt.

THIS LIMITED WARRANTY CONSTITUTES THE ONLY WARRANTY FOR THE PRODUCTS AND ALL OTHER WARRANTIES OR REPRESENTATIONS, EXPRESS OR IMPLIED, BY OPERATION OF LAW OR OTHERWISE, INCLUDING BUT NOT LIMITED TO ANY IMPLIED WARRANTY OF MERCHANTABILITY OR FITNESS FOR A PARTICULAR PURPOSE, ARE EXPRESSLY DISCLAIMED, WHERE PERMITTED BY STATE OR PROVINCIAL LAW.

THIS LIMITED WARRANTY CONSTITUTES THE SOLE REMEDY AVAILABLE WITH REGARD TO ANY DEFECTIVE PRODUCTS. KNAPE & VOGT SHALL NOT BE LIABLE FOR ANY INCIDENTAL, INDIRECT, CONSEQUENTIAL OR SPECIAL DAMAGES, INCLUDING WITHOUT LIMITATION, LOSS OF TIME, INCONVENIENCE, OR LOST REVENUES OR PROFITS, WHERE PERMITTED BY STATE OR PROVINCIAL LAW.

Copyright ©2023 Knape & Vogt Manufacturing Company, all rights reserved.
Standard KV Commercial Warranty

Return Policy

Return Policy for special order or nonstock items:

We're sorry, we cannot accept returns on nonstock products or special order products unless there is a Knape & Vogt error — which we will be happy to correct. To return product(s), please follow these procedures:

Please contact Knape & Vogt Customer Service at 1.800.253.1561 or email customerservice@kv.com. A Customer Service Representative will assist you with getting a Return Goods Authorization (RMA) number. The original P.O. is required to receive a RMA number. Please return product within 30 days of issuance of the RMA number.

Restocking Fees:

- All resalable product returned in original resalable packaging will be assessed a 25% fee for restocking and handling.
- Minimum fee is $25.
- All resalable products not returned in resalable original packaging will be assessed a 25% fee for repackaging in addition to the 25% restocking and handling fee.
- Above referenced fees will be waived on returns resulting from a Knape & Vogt error.

Shipping:

You are responsible for all return shipping charges to return the product unless we made an error in shipping your order, i.e., the product we shipped is not the one you ordered, or is defective.

In the US, please ship to: Knape & Vogt
Return Goods Department, 3800 Eastern Ave SE, Wyoming, MI 49509

In Canada, please ship to:
Knape and Vogt/ Vanguard, Attn: Return Goods Department, 265 Export Blvd, Mississauga, ON L5S 1Y4

- Ensure the product(s) are properly packaged to prevent shipping damage.
- Include RMA number with return.
- Ensure all products returned match quantities and products listed on the assigned RMA.

Credit:

- A credit memo will be issued upon inspection and approval of the returned product.
- Upon receipt and inspection Knape & Vogt will determine credit amount and notify you of any discrepancies.
- DO NOT make any financial adjustments to your account prior to Knape and Vogt issuing a credit memo for returned goods.
- Please allow a minimum of 15 days for us to receive and process your return.
- We will credit or refund the value of the product total and any taxes you were charged less applicable fees. (excluding delivery charges).
- Refunds will be given in the same form of payment. Adjustments to credit cards should appear within two billing cycles.

Replacement Orders:

- Any replacement orders will be charged to your account.
- A credit memo will be issued for returned products that have been approved.

RMA Status Information:

- Visit www.customercareconnection.com.
- Enter your account information.
- If you do not already have your account set up for this free service, please register at www.customercareconnection.com.
- Your satisfaction is our priority. We are happy to accept returns or exchanges for any resalable or defective products within 60 days of the shipping date.

Download at www.kv.com > Resource Library

2700 Oak Industrial Dr. NE
Grand Rapids, MI 49505-6026 USA
1.800.253.1561 | customerservice@kv.com
www.kv.com

This and other KV literature is available for download at www.kv.com > Resource Library

Knape & Vogt reserves the right to change product specifications at any time without notice and without incurring responsibility for existing units.

©2023 Knape & Vogt. KV and the KV logo are trademarks of Knape & Vogt.

OL3275/1123