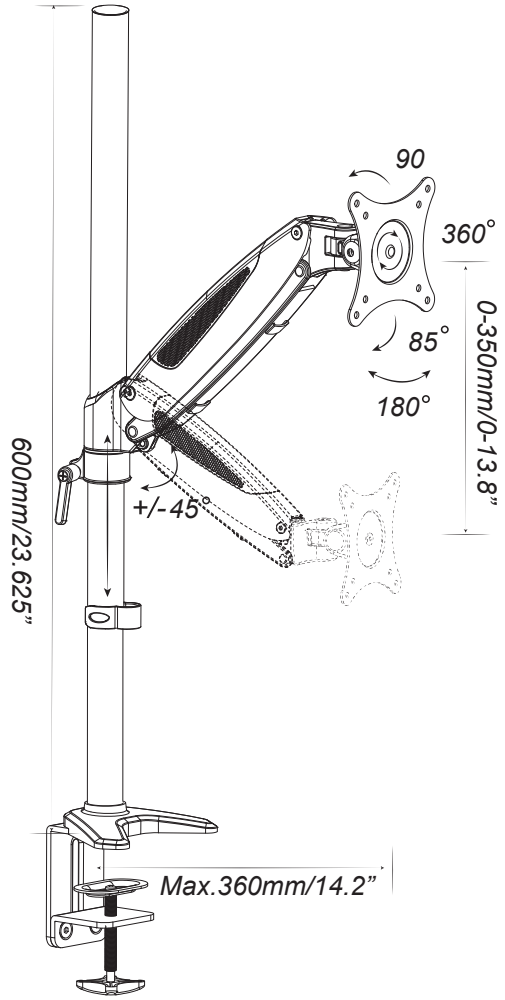
90
360°
85°
180°
0-350mm/0-13.8”
+/-45°
600mm/23.625”
Max.360mm/14.2”

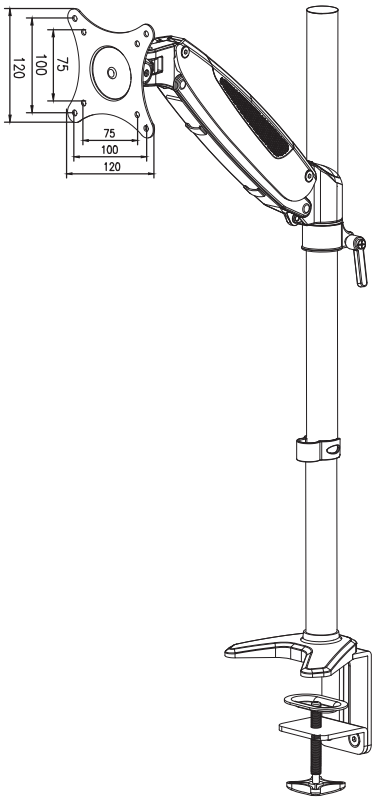
120
100
75
75
100
120

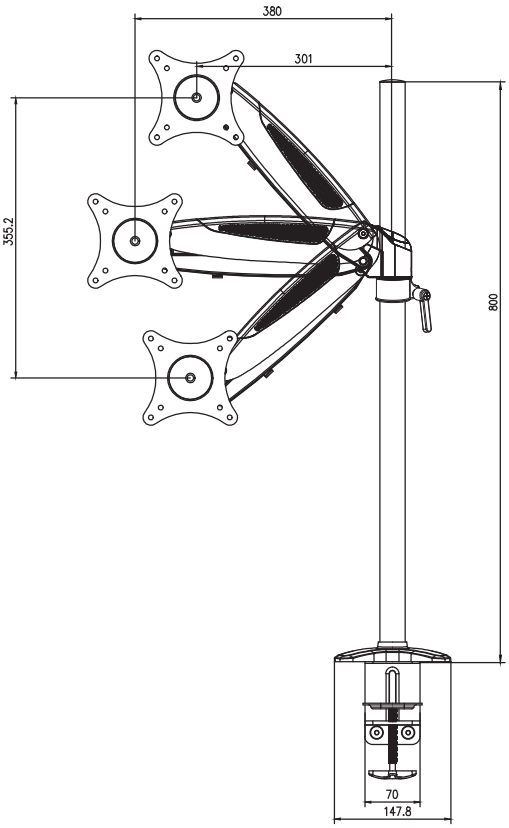
380
301
355.2
800
70
147.8

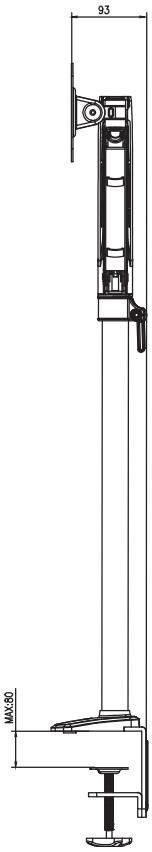
93
MAX:80