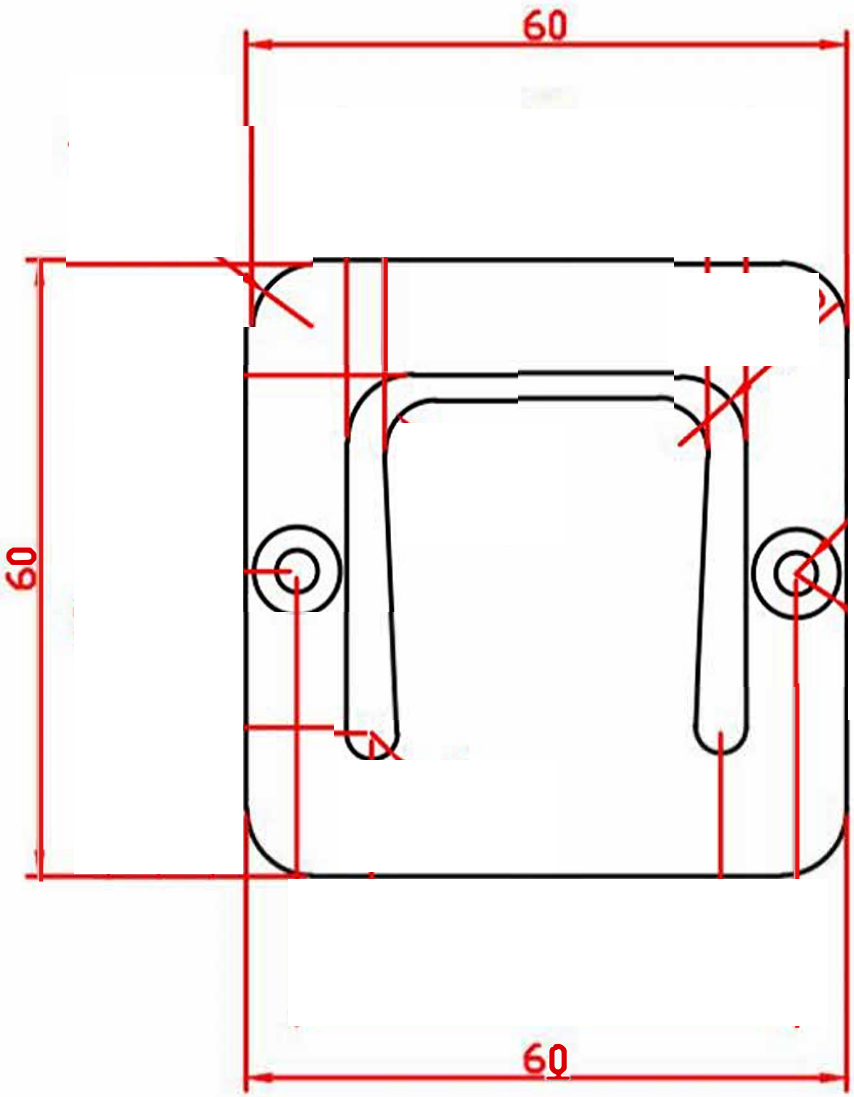
60
60
60

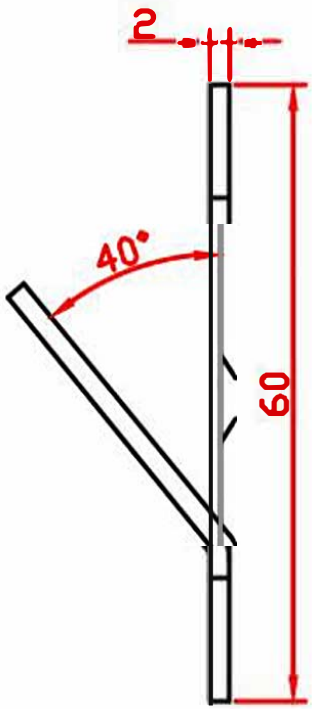
2
40°
60