HeavyDutyTrack

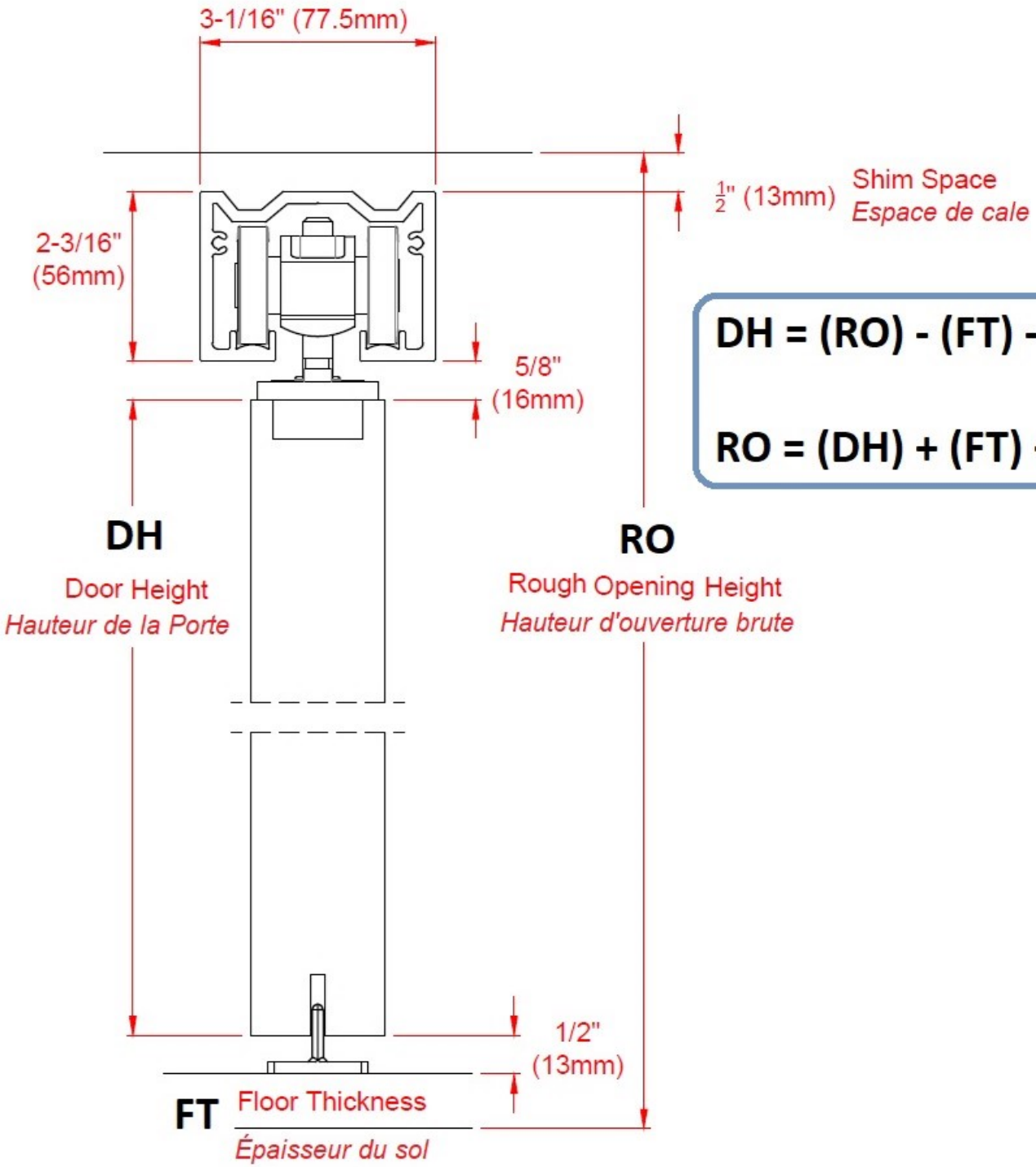

DH = (RO) - (FT) - (3-13/16")

RO = (DH) + (FT) + (3-13/16")