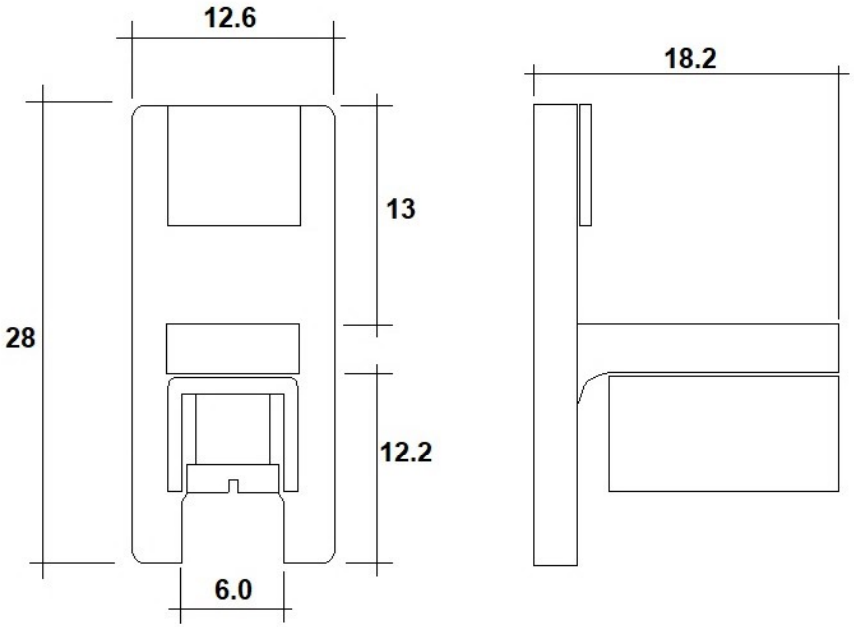
12.6
18.2
13
28
12.2
6.0