CONR20259 Draw Latch

Concealed · Shallow tab

Latch

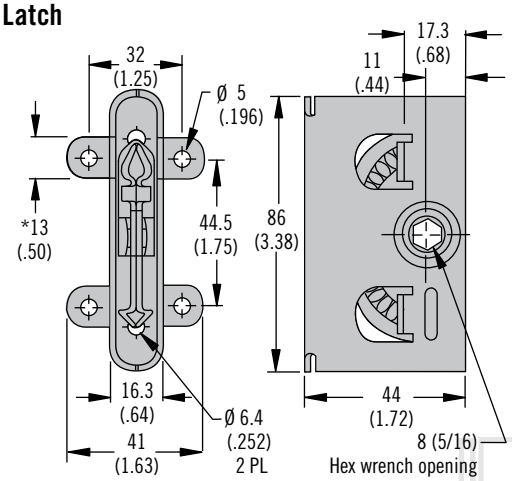

Receptacle

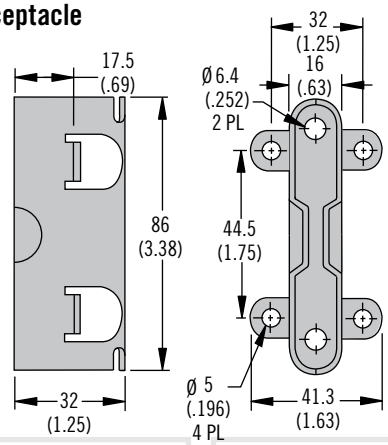

*** Typical on latch and receptacle**

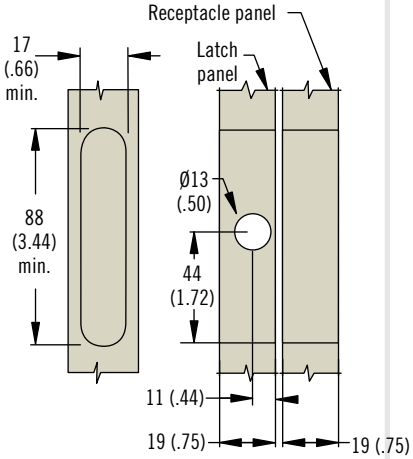

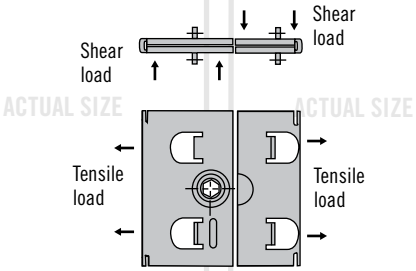

Accessories

Actuation Tool

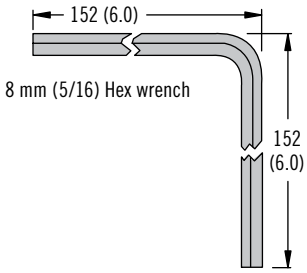

Reference	
Latch	CONR20259
Receptacle	CONR20257

Dimensions in millimeters (inch) unless otherwise stated