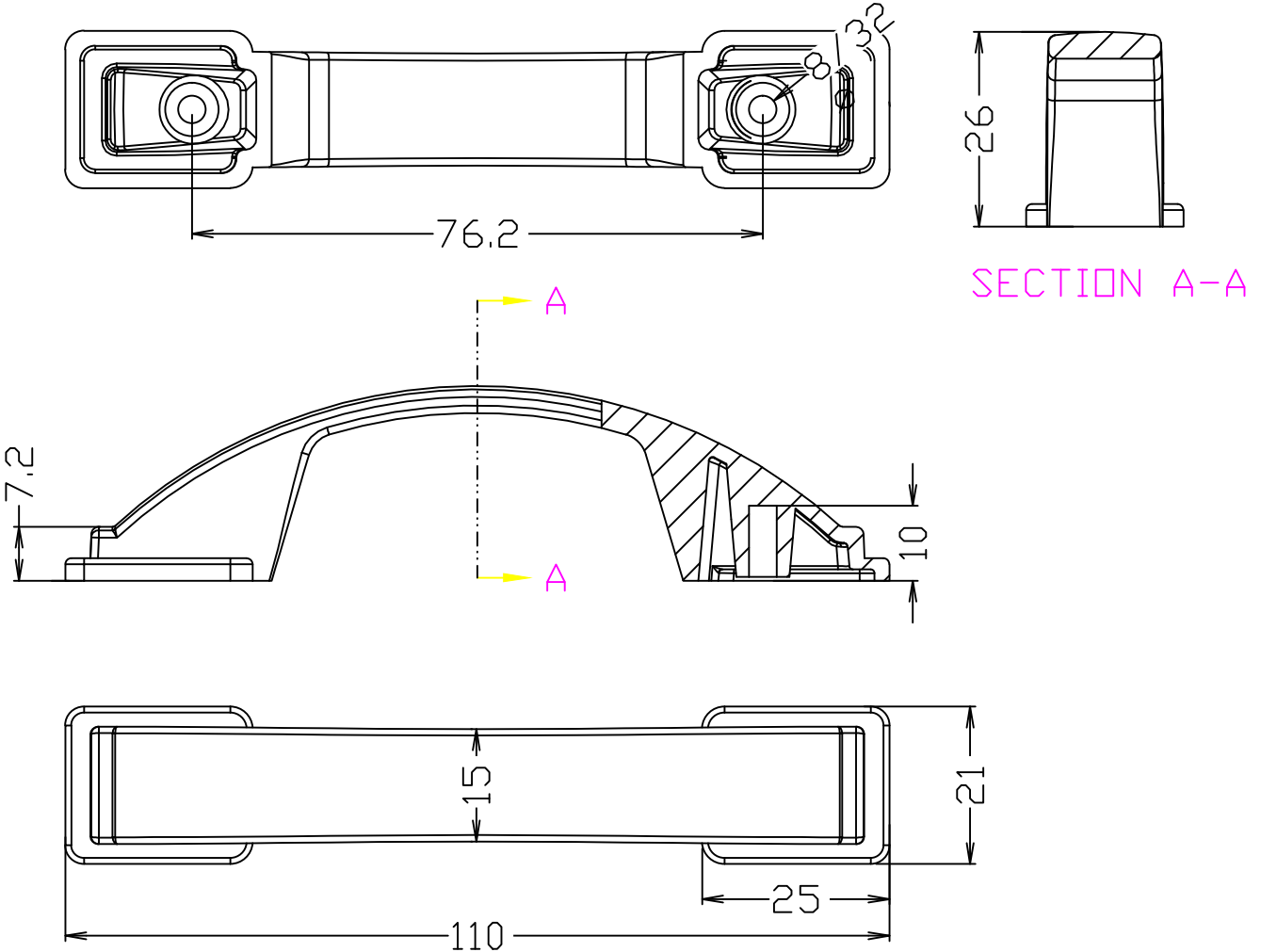
3.2
8
8
76.2
26
SECTION A-A
A
A
7.2
10
15
21
25
110