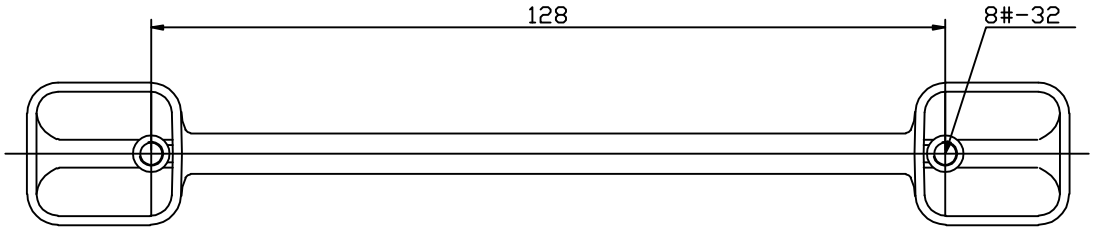
128
8#-32

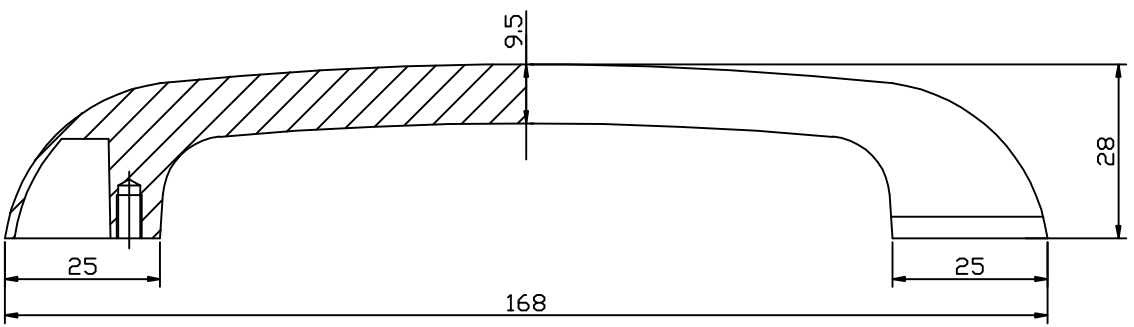
9.5
28
25
25
168

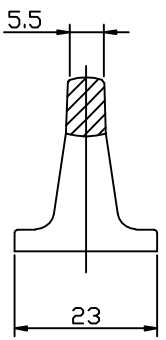
5.5
23