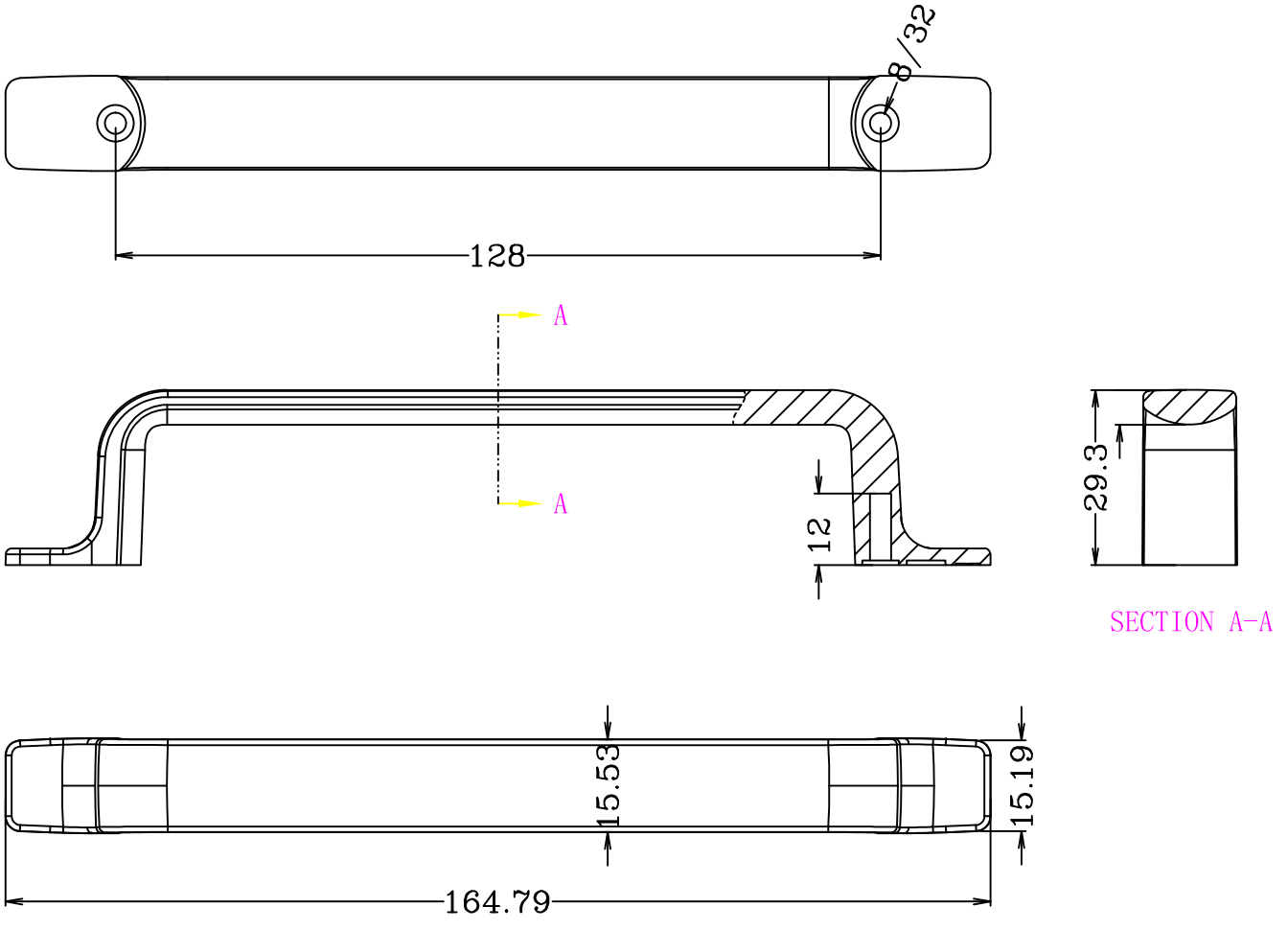
8/32
128
A
A
12
29.3
SECTION A-A
15.53
15.19
164.79