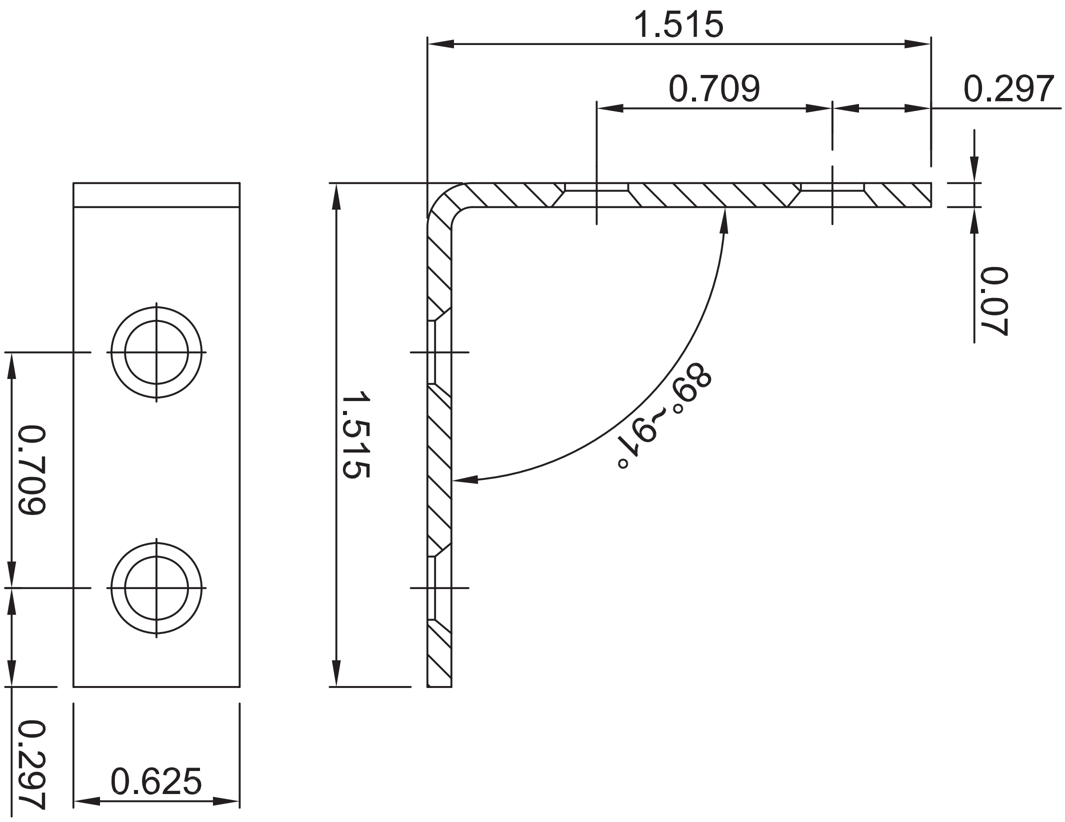

Corner Brace1.5"x5/8"
97X15

REVISION	
WEIGHT	
SCALE	
DRAWING NO.	
MATERIAL	
FINISH	
PROJECTION	
UNITS	inch
TOLERANCE	

MARKER	COUNT	AREA	REVISION	APPROVE	DATE
DRAWING			STANDIZATION		
DESIGNING					
CHECK					
TECHNICS			APPROVE		