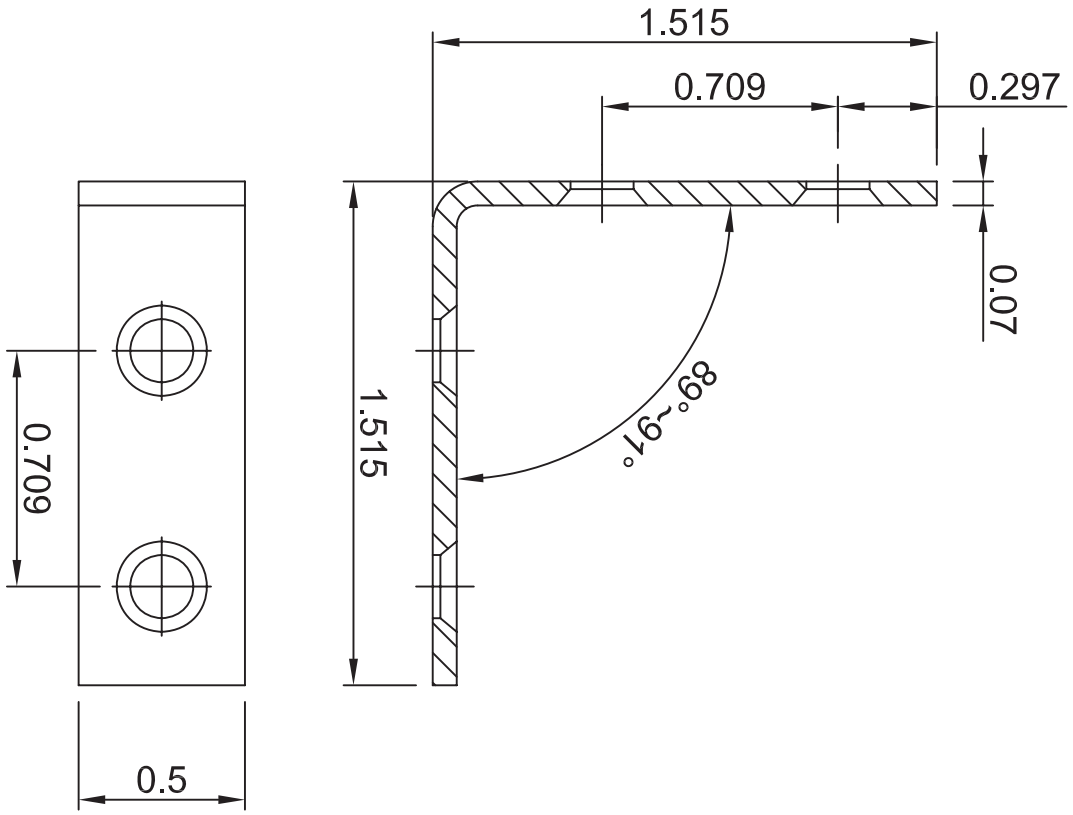

MARKER	COUNT	AREA	REVISION	APPROVE	DATE
DRAWING			STANDIZATION		
DESIGNING					
CHECK					
TECHNICS			APPROVE		

Corner Brace
1.5"x1/2"

REVISION	WEIGHT	SCALE	DRAWING NO.		PROJECTION
			MATERIAL		UNITS
			FINISH		TOLERANCE

inch