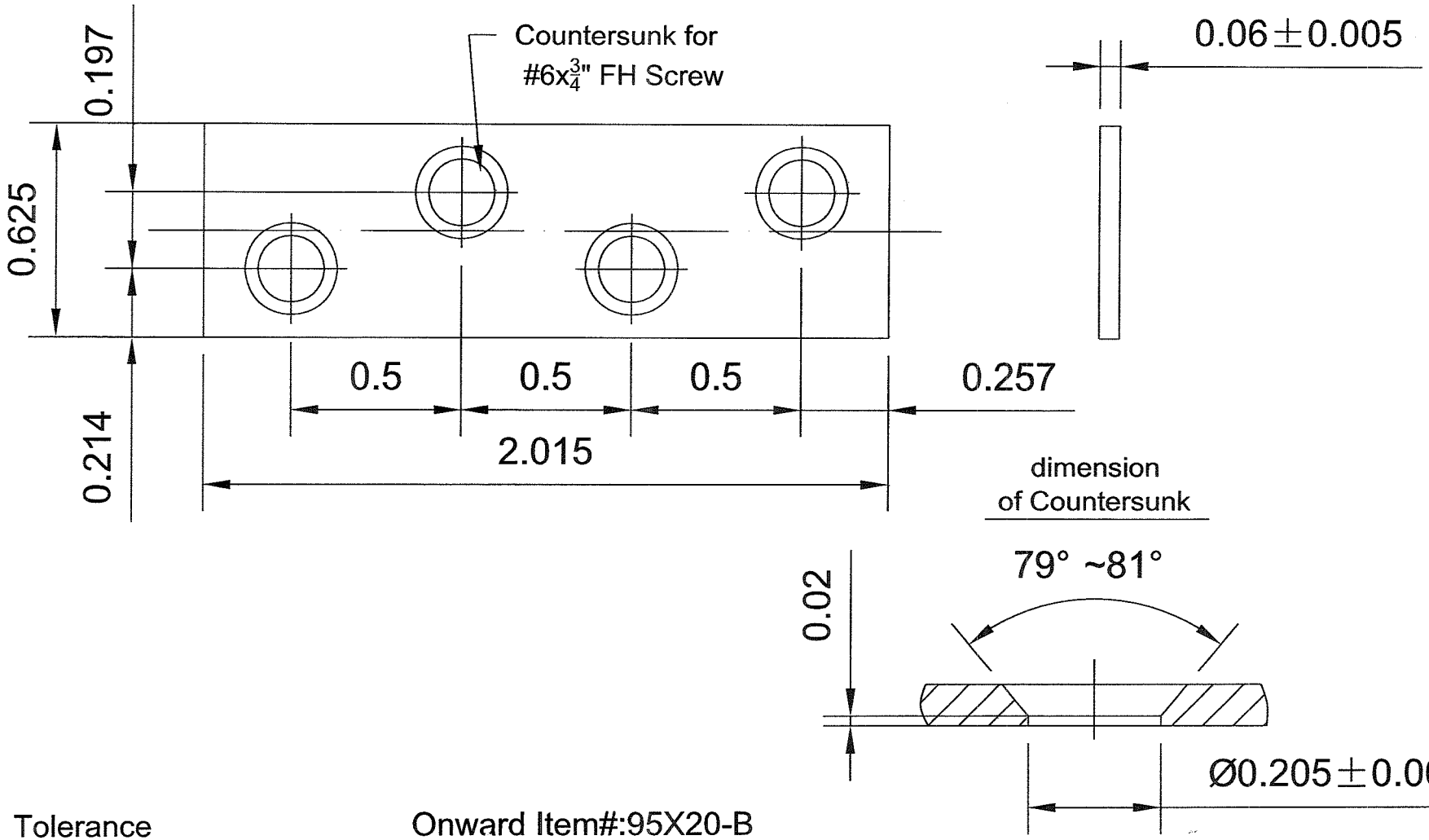

Tolerance
All Tolerance unless
otherwise noted : ±0.015″

Onward Item#:95X20-B
95X20-BC
95X20-R
95B20-B
95B20-R

MARKER	COUNT	AREA	REVISION	APPROVE	DATE	Mending Plate 2"x5/8"						
DRAWING			STANDIZATION			REVISION	WEIGHT	SCALE	DRAWING NO.		PROJECTION	
DESIGNING									MATERIAL		UNITS	inch
CHECK						TOTAL 1 PAGE NO.1 PAGE			FINISH		TOLERANCE	
TECHNICS			APPROVE									