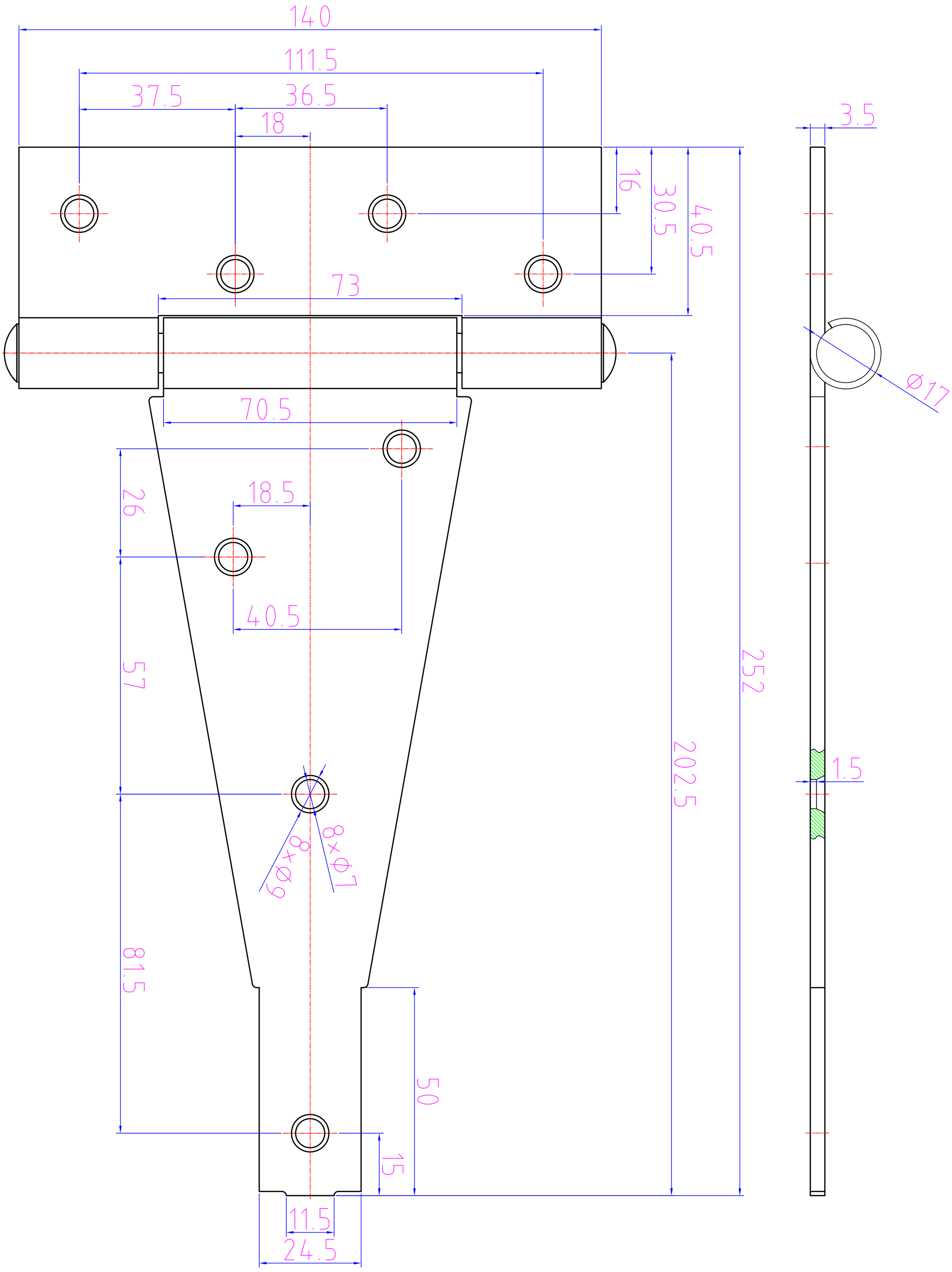
140
111.5
37.5
36.5
18
3.5
16
30.5
40.5
73
Ø17
70.5
26
18.5
40.5
57
252
202.5
1.5
8×Ø7
8×Ø9
81.5
50
15
11.5
24.5