Onward Item	A±0.015	B±0.015	C±0.015	D±0.015	E±0.015	F±0.015	G±0.015	H±0.015	I±0.015	J±0.02	K±0.015	L±0.02	M±0.005	N±0.005	P
91X20-BC	2.0	0.375	0.735	0.406	0.188	0.375	0.063	0.032	0.610	0.305	0.937	0.500	0.248	0.060	#8x$\frac{5}{8}$"
91X30-BC	3.0	0.469	0.891	0.406	0.219	0.469	0.063	0.047	0.75	0.375	1.625	0.375	0.248	0.077	#8x$\frac{5}{8}$"
91X40-BC	4.0	0.75	1.281	0.875	0.344	0.750	0.063	0.052	0.875	0.438	2.562	0.438	0.285	0.094	#10x$\frac{3}{4}$"

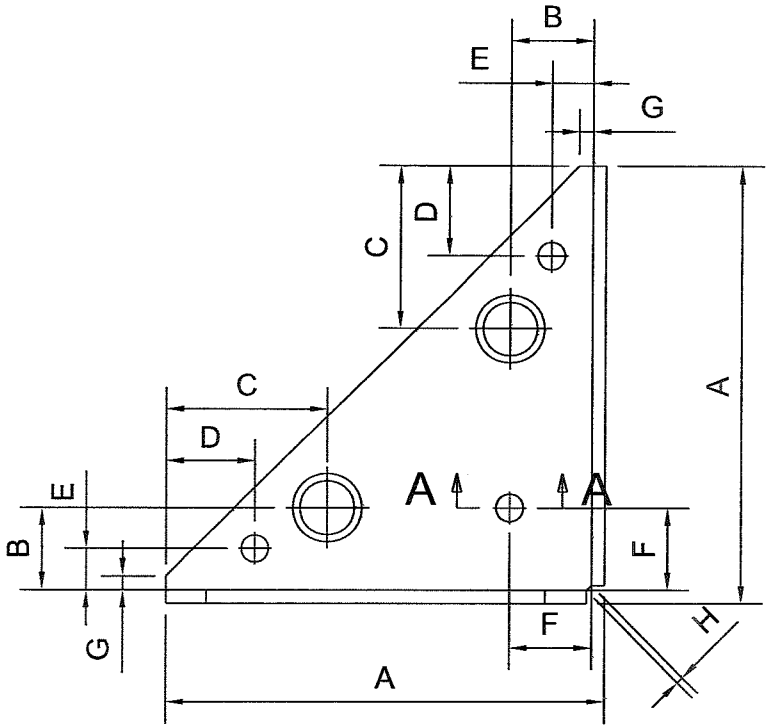

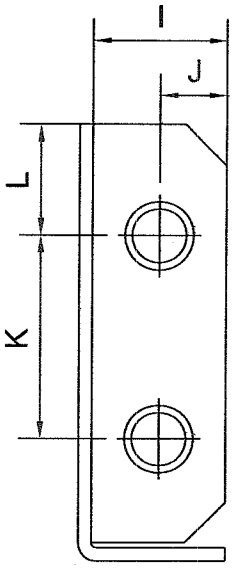

A-A
2:1

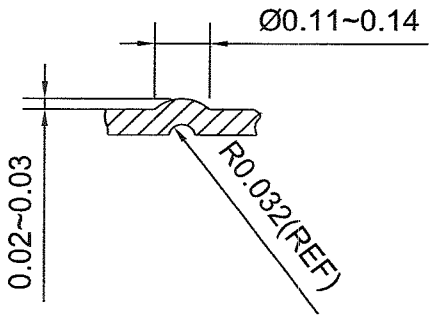

dimension of Countersunk

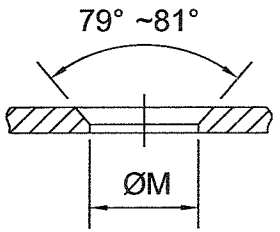

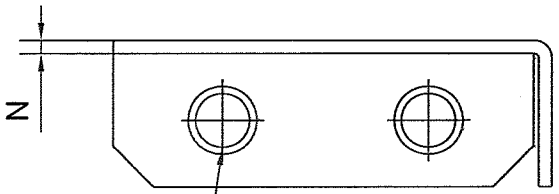

Countersunk for
#P FH Screw

MARKER	COUNT	AREA	REVISION	APPROVE	DATE	Heavy Duty Corner Brace								
DRAWING			STANDIZATION			REVISION	WEIGHT	SCALE	DRAWING NO.		PROJECTION			
DESIGNING									MATERIAL		UNITS	inch		
CHECK						TOTAL 1 PAGE NO.1 PAGE			FINISH		TOLERANCE			
TECHNICS			APPROVE											