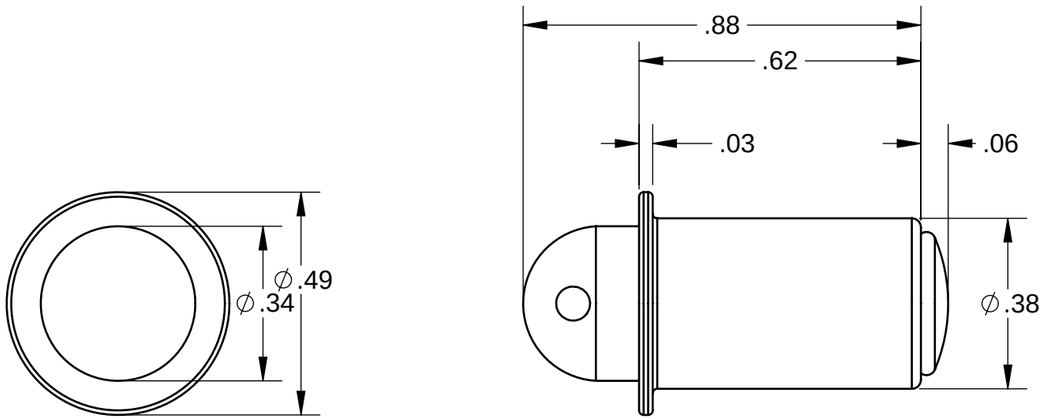


903 CATCH

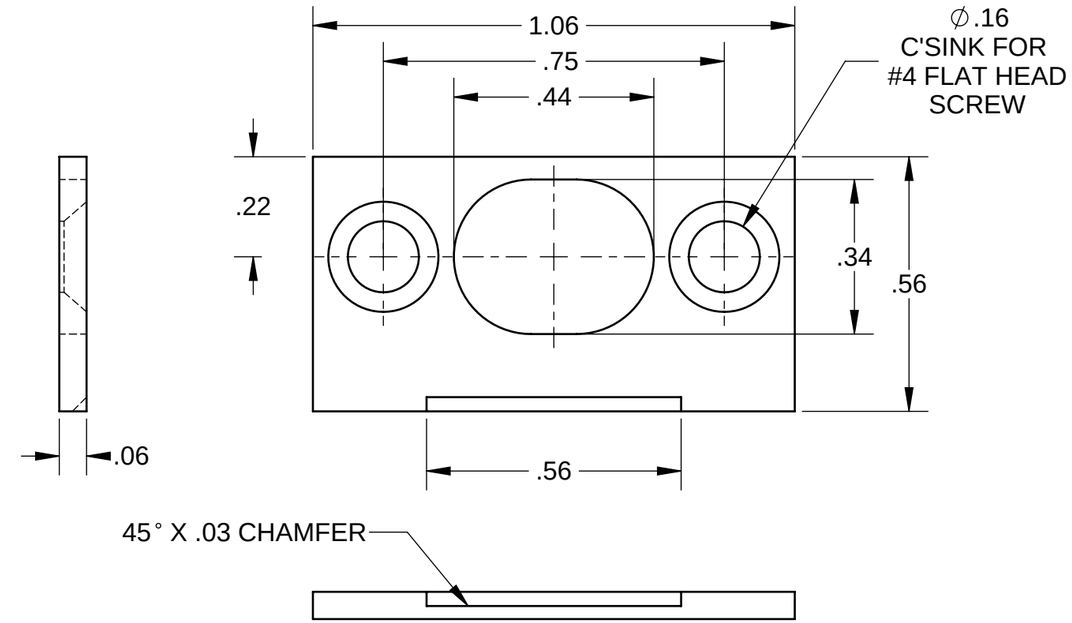


903 STRIKE PLATE

Richelieu

Ref.: 903BRDIP

NOTE:
(2) #4 x 1/2" FLAT HEAD WOOD SCREWS INCLUDED WITH CATCH AND STRIKE PLATE.