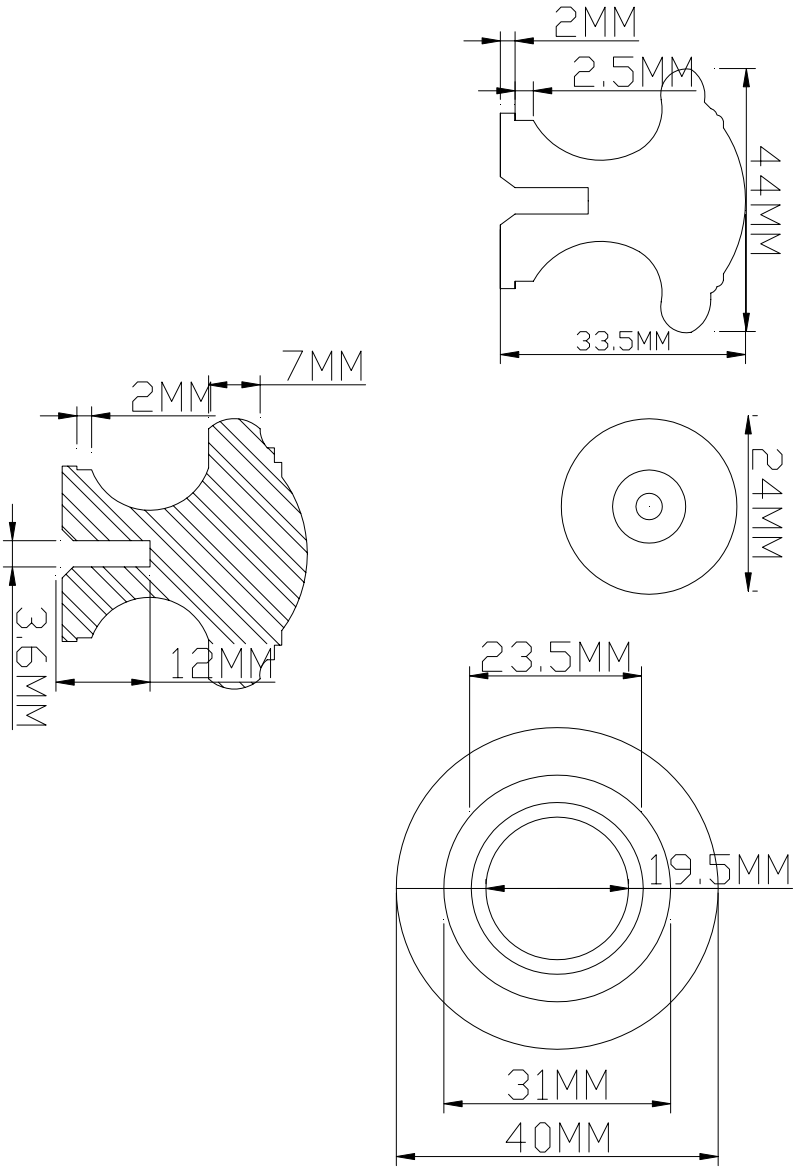
2MM
2.5MM
44MM
33.5MM
7MM
2MM
24MM
3.6MM
12MM
23.5MM
19.5MM
31MM
40MM