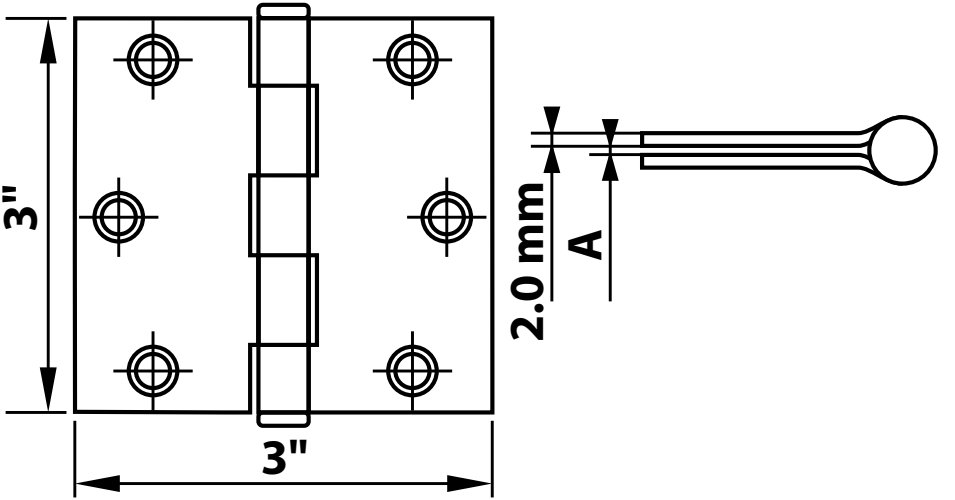
3"
3"
2.0 mm
A