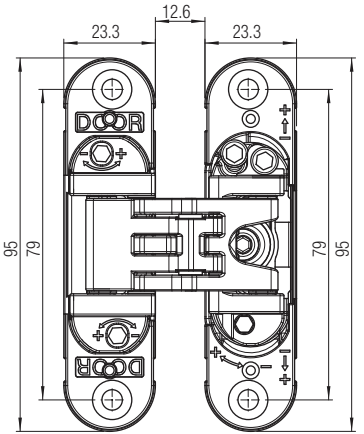
12.6
23.3
23.3
95
79
79
95

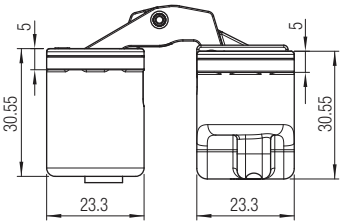
5
5
30.55
30.55
23.3
23.3

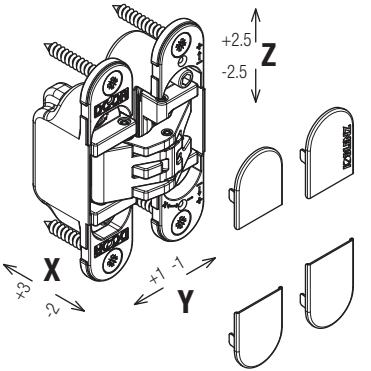
+2.5
-2.5
Z
X
+3
-2
+1
-1
Y