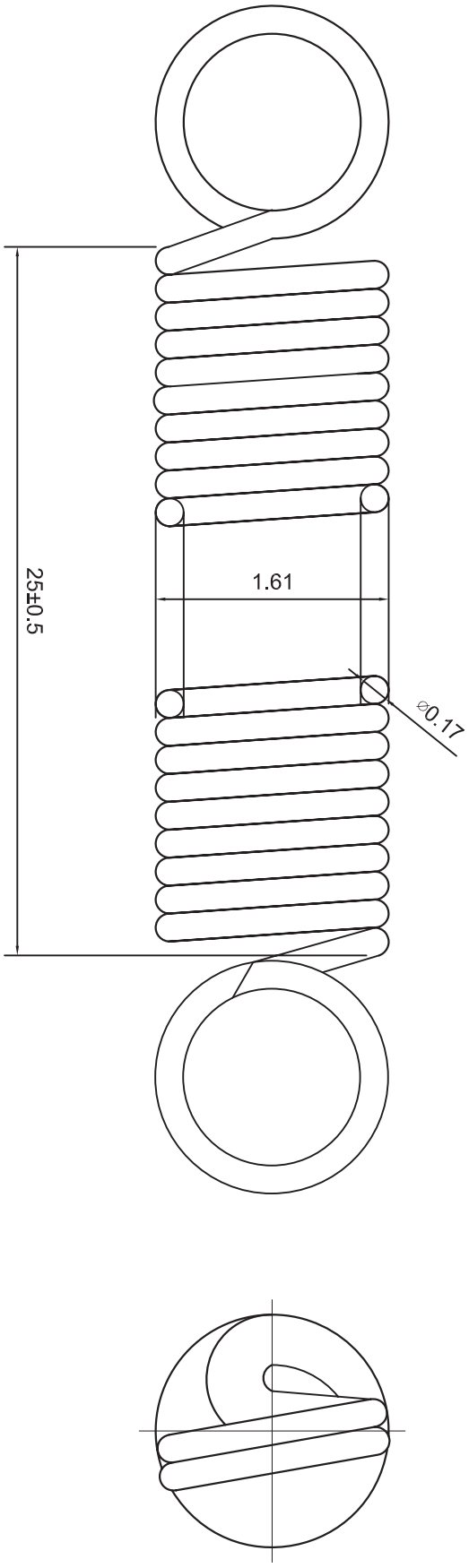
25±0.5
1.61
⌀0.17