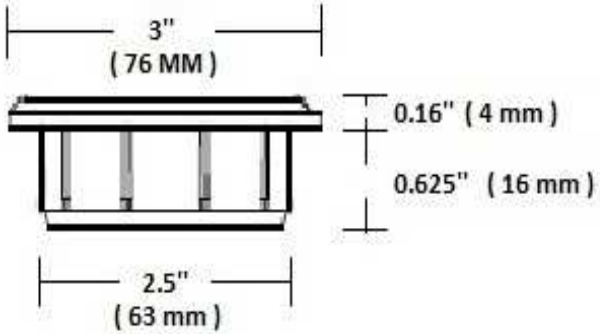
3"
(76 MM)
0.16" (4 mm)
0.625" (16 mm)
2.5"
(63 mm)

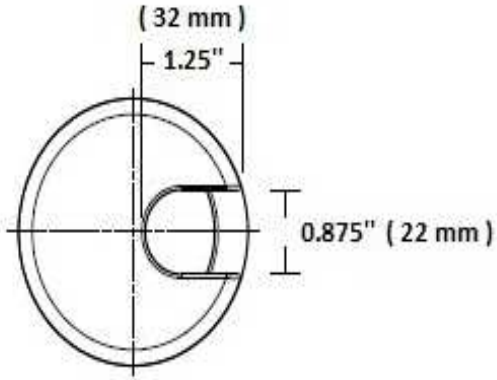
(32 mm)
1.25"
0.875" (22 mm)