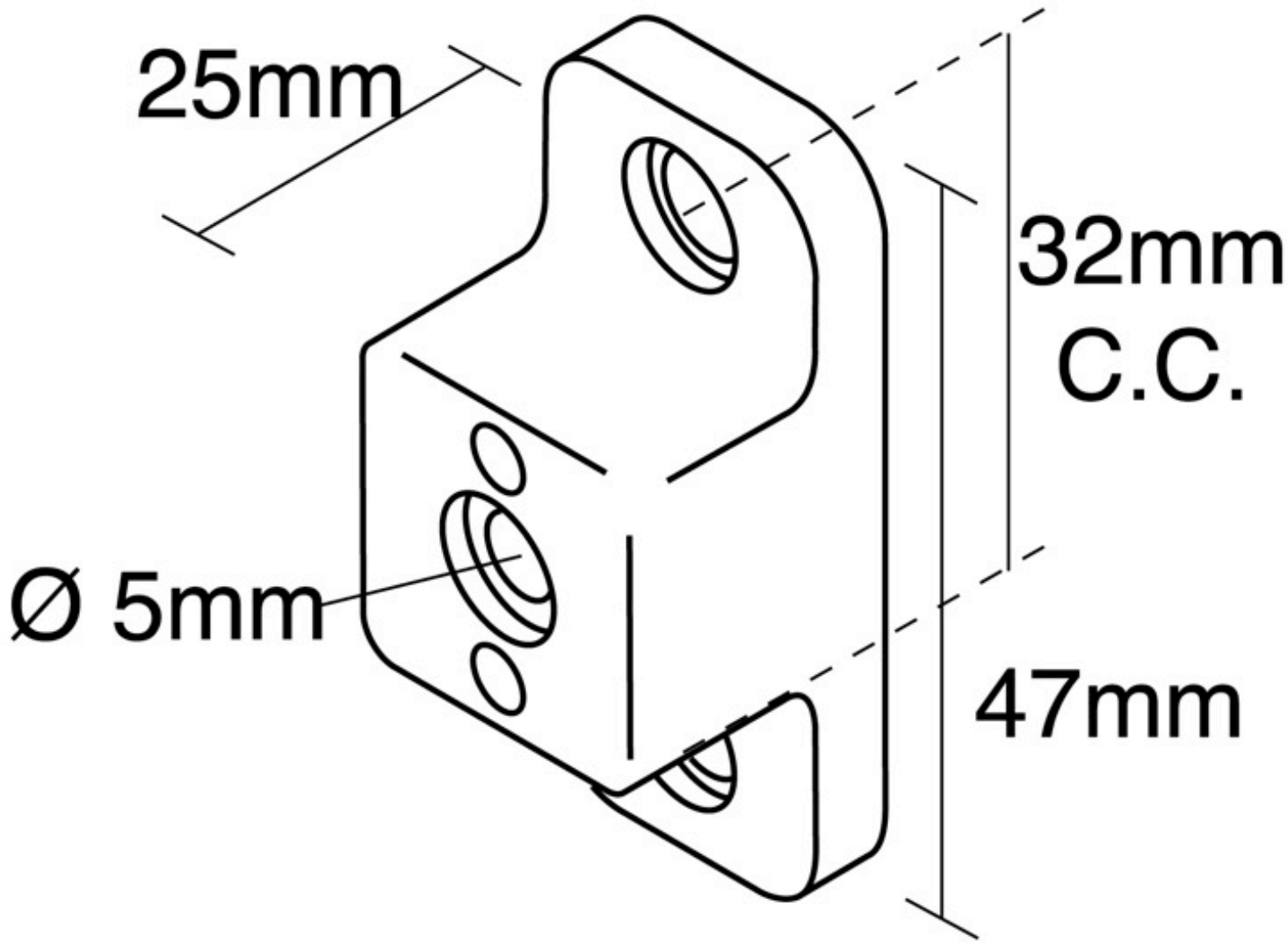
25mm
32mm
C.C.
Ø 5mm
47mm