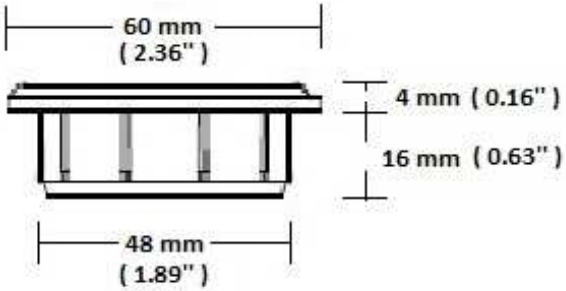
60 mm
(2.36")
4 mm (0.16")
16 mm (0.63")
48 mm
(1.89")

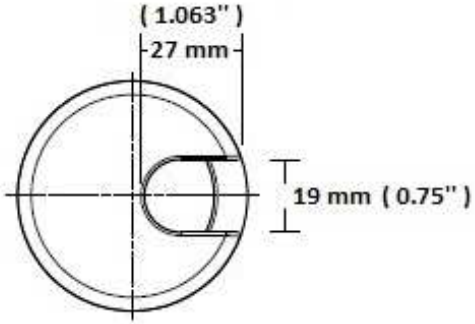
(1.063")
27 mm
19 mm (0.75")