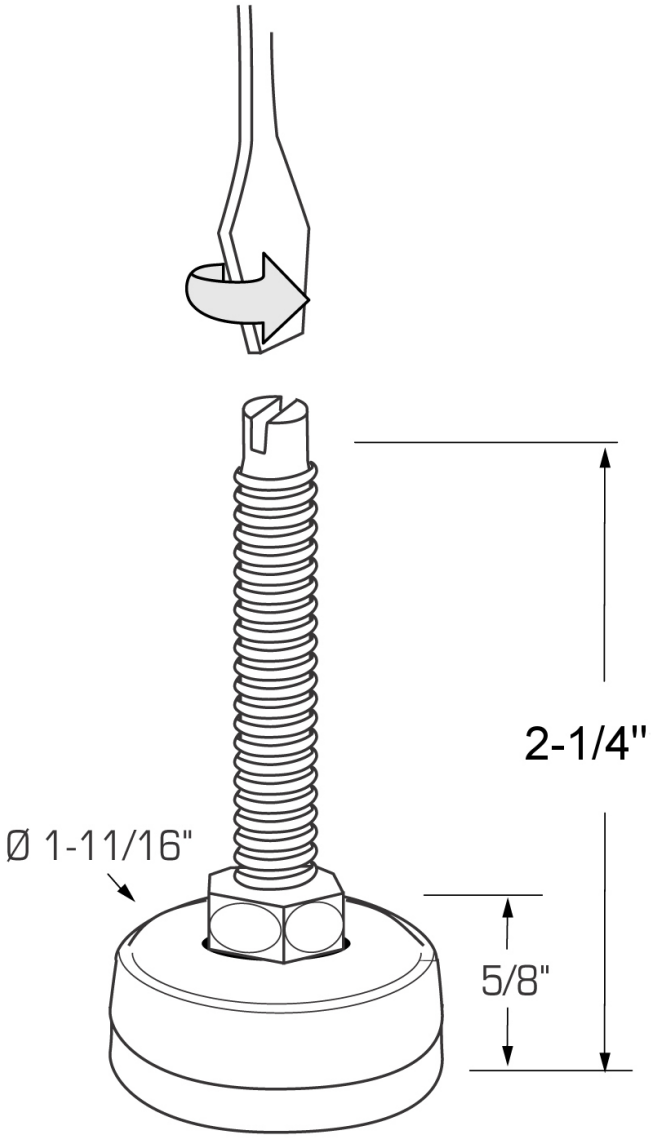
2-1/4"
Ø 1-11/16"
5/8"