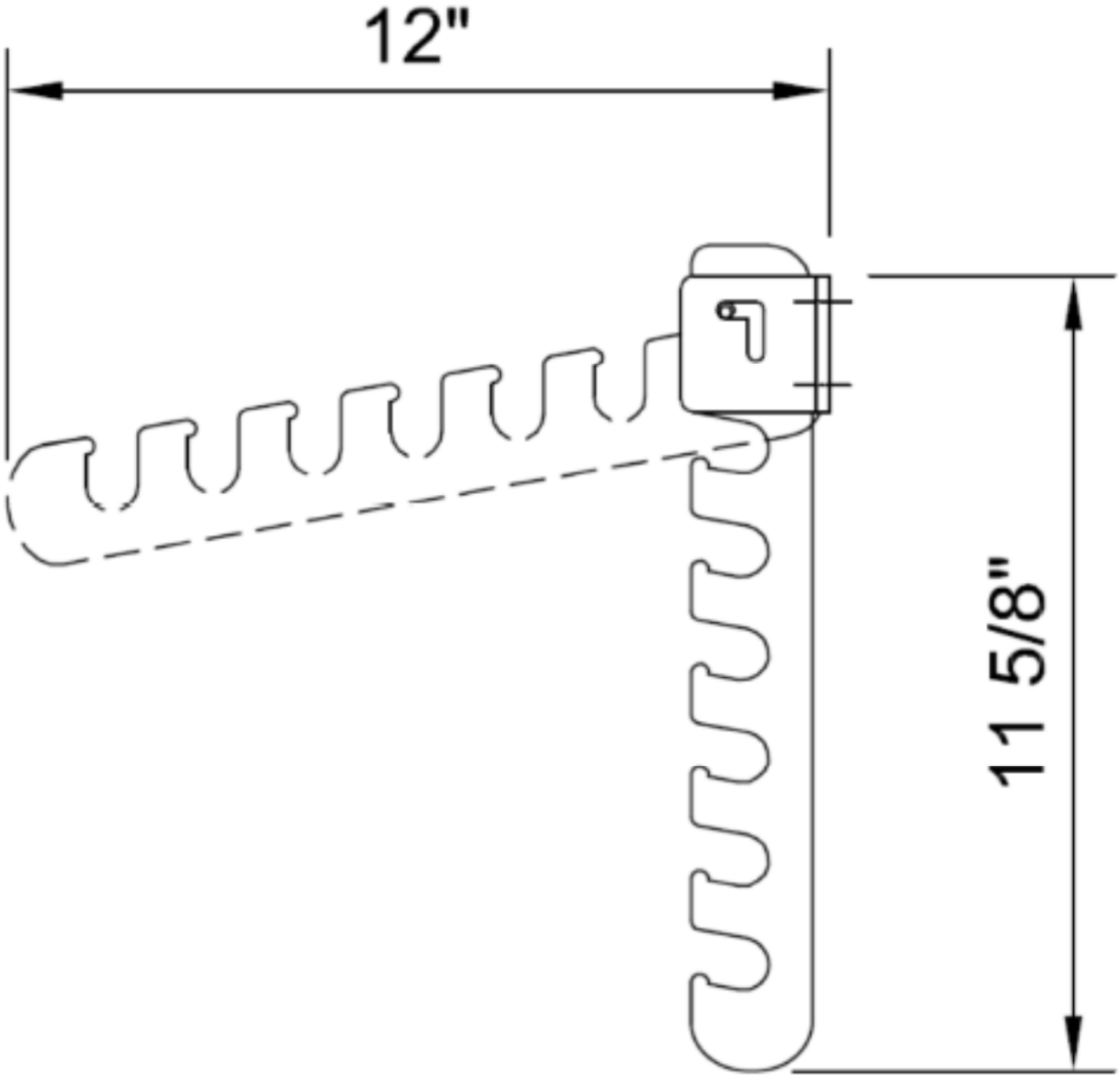
12"
11 5/8"