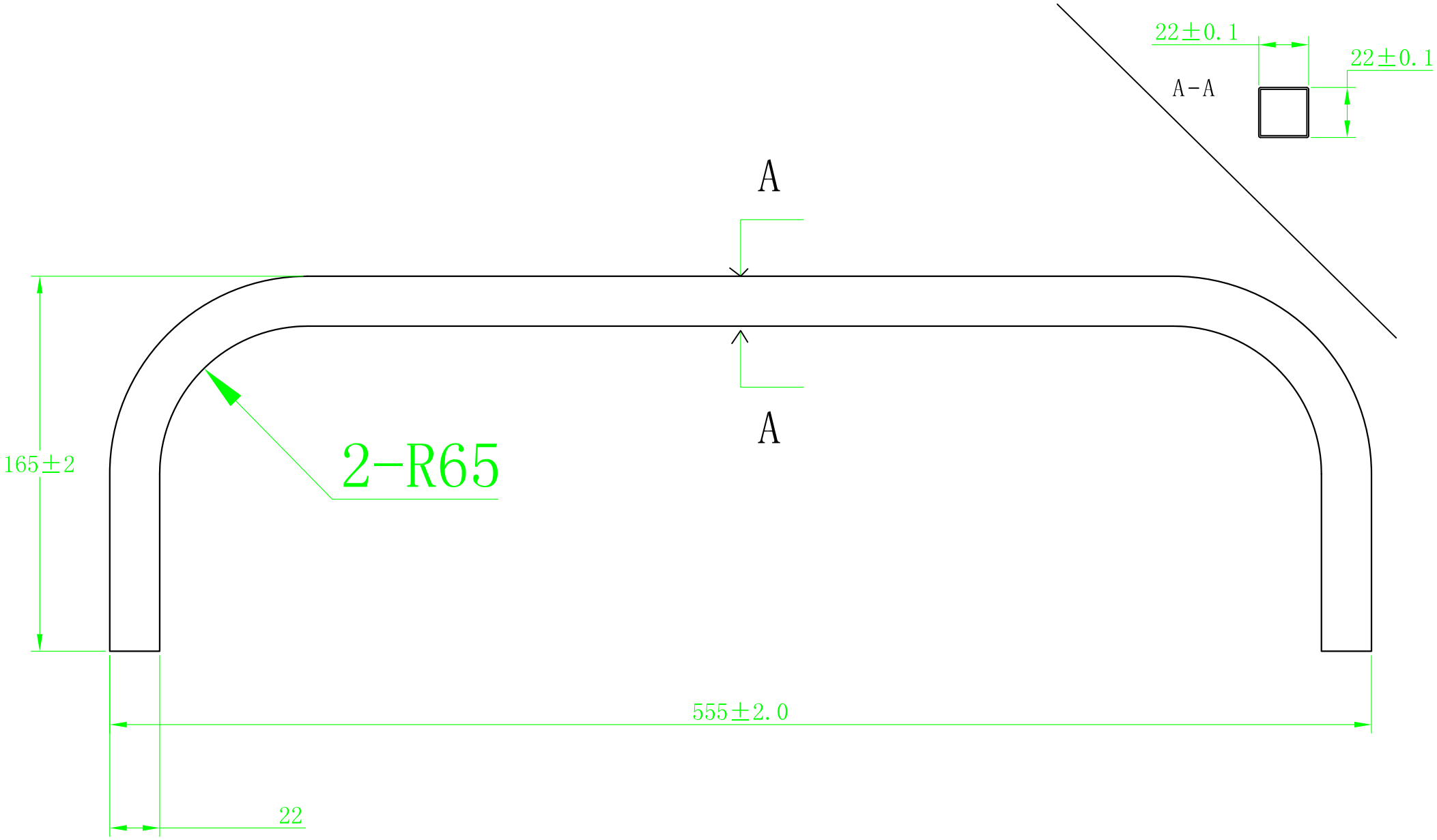
22±0.1
22±0.1
A-A
A
A
2-R65
165±2
555±2.0
22