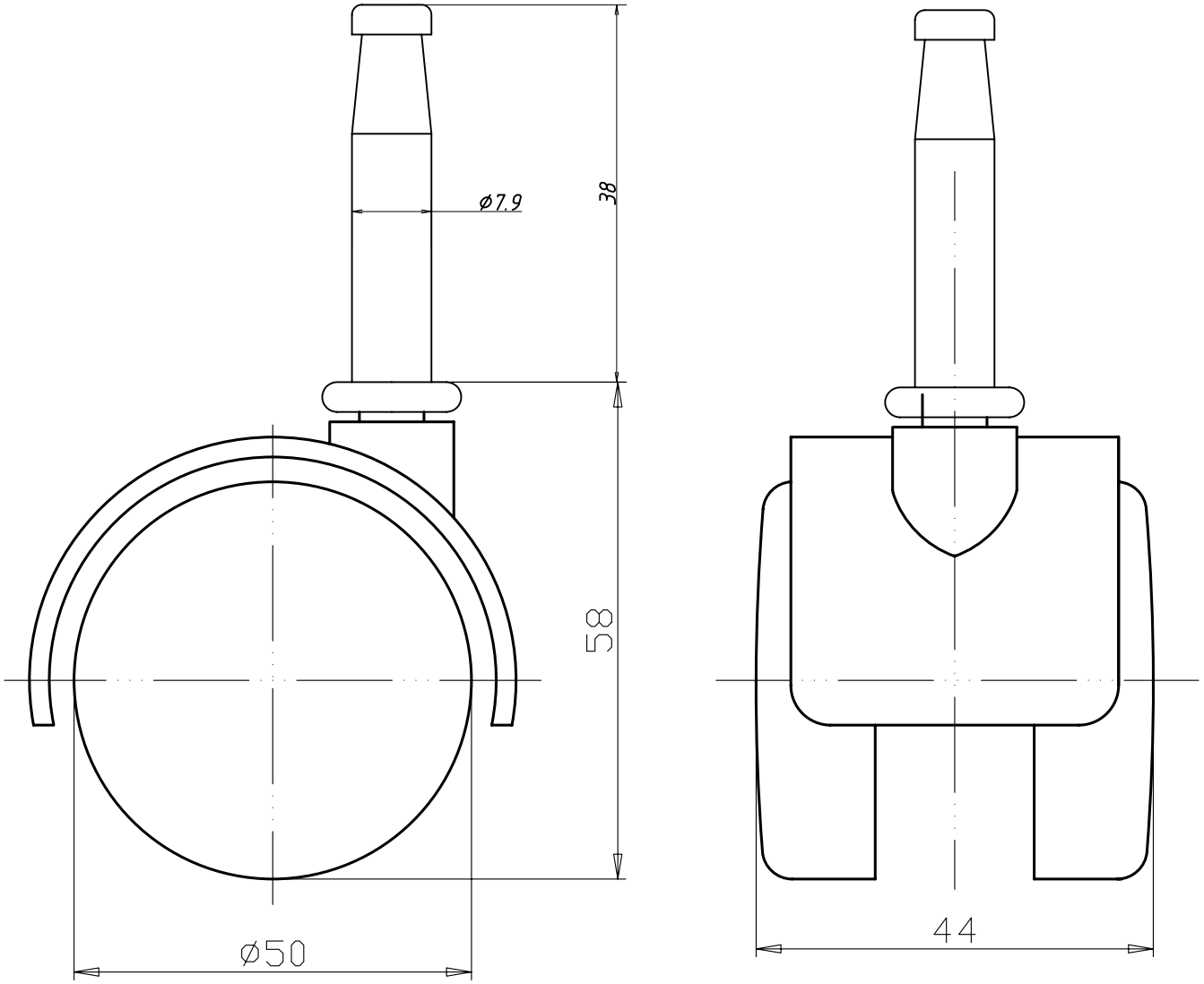

Richelieu

ref. 50190 & 501130