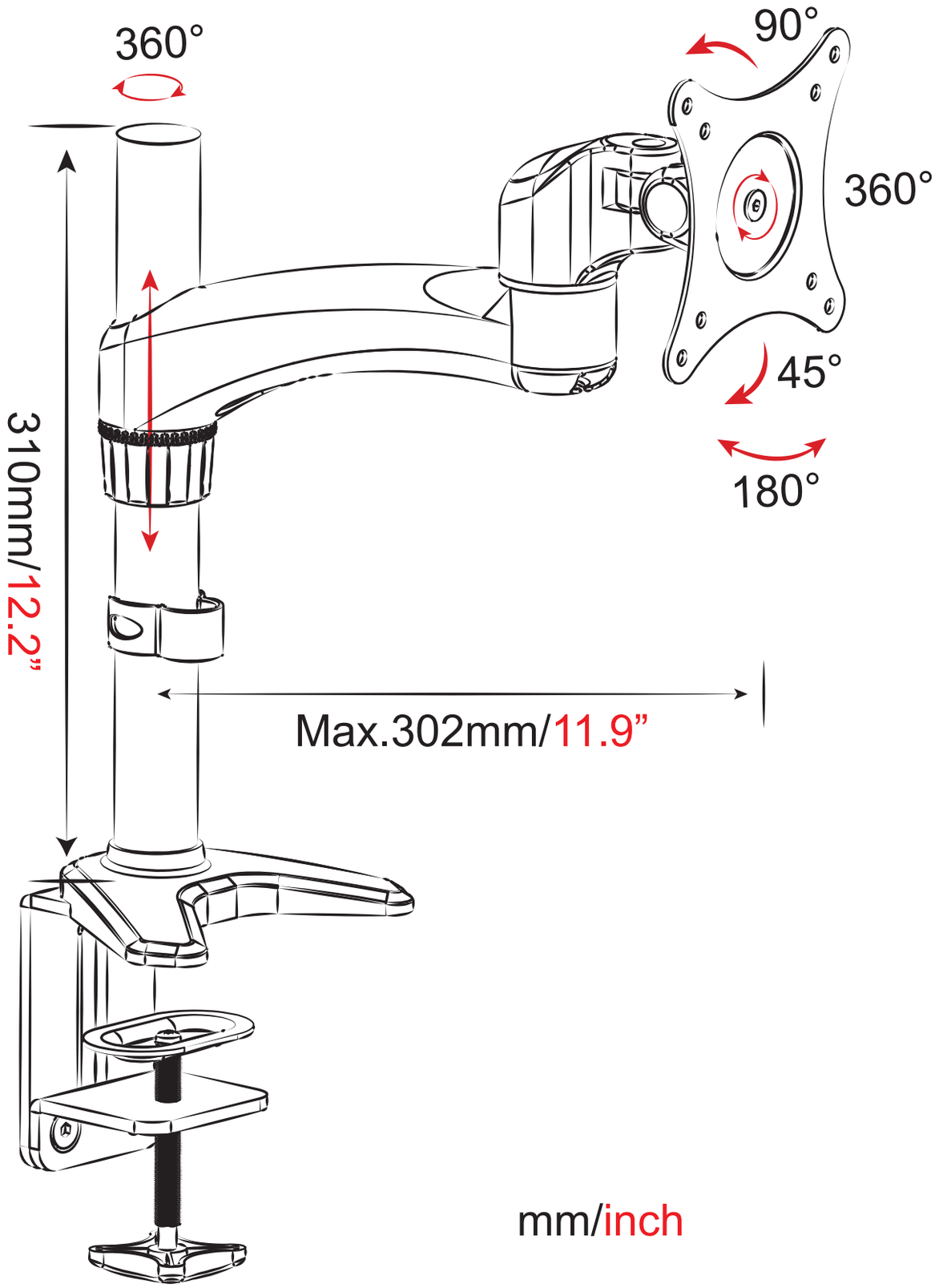
360°
90°
360°
45°
180°
310mm/12.2”
Max.302mm/11.9”
mm/inch