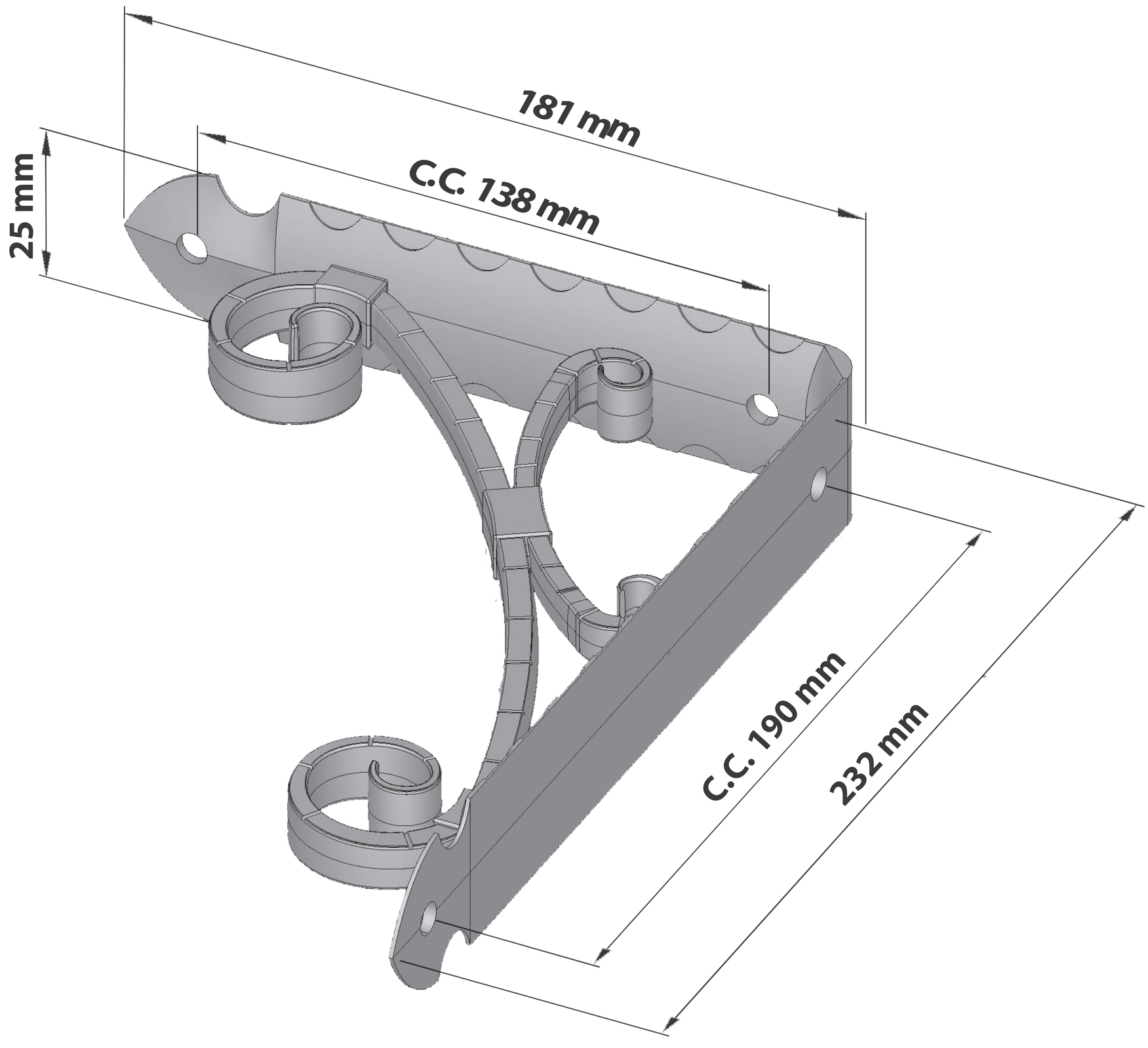
181 mm
C.C. 138 mm
25 mm
C.C. 190 mm
232 mm