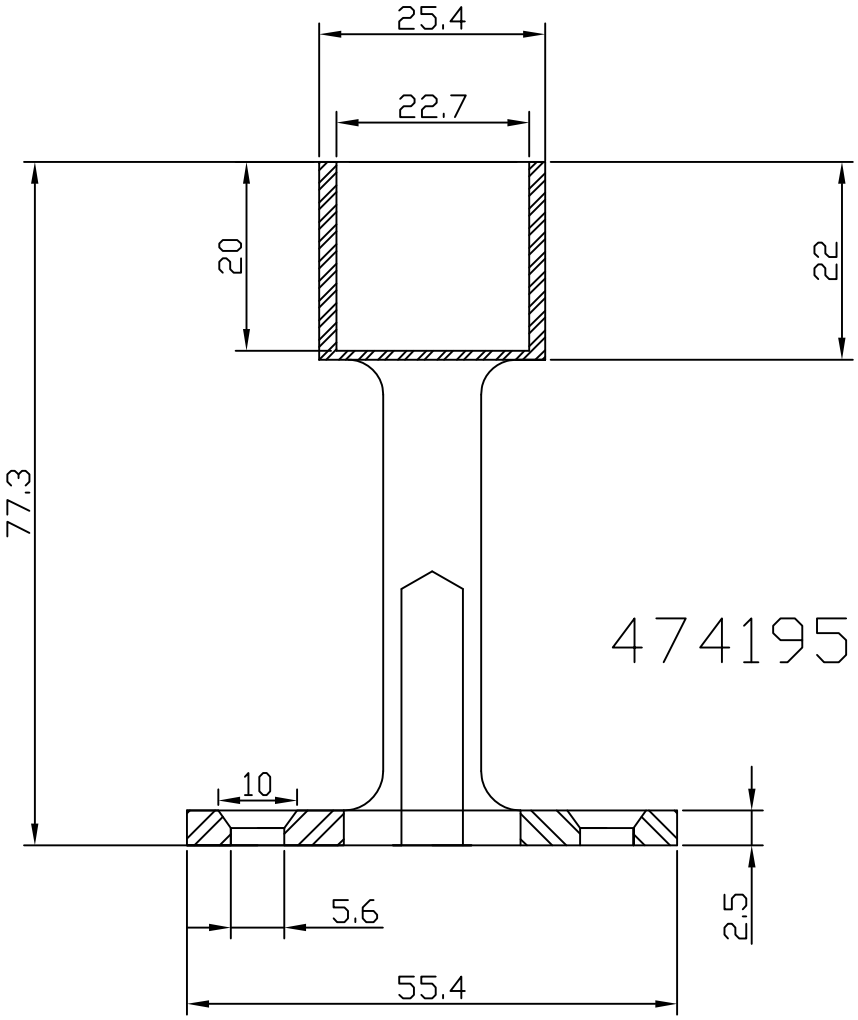
25.4
22.7
20
22
77.3
474195
10
5.6
2.5
55.4