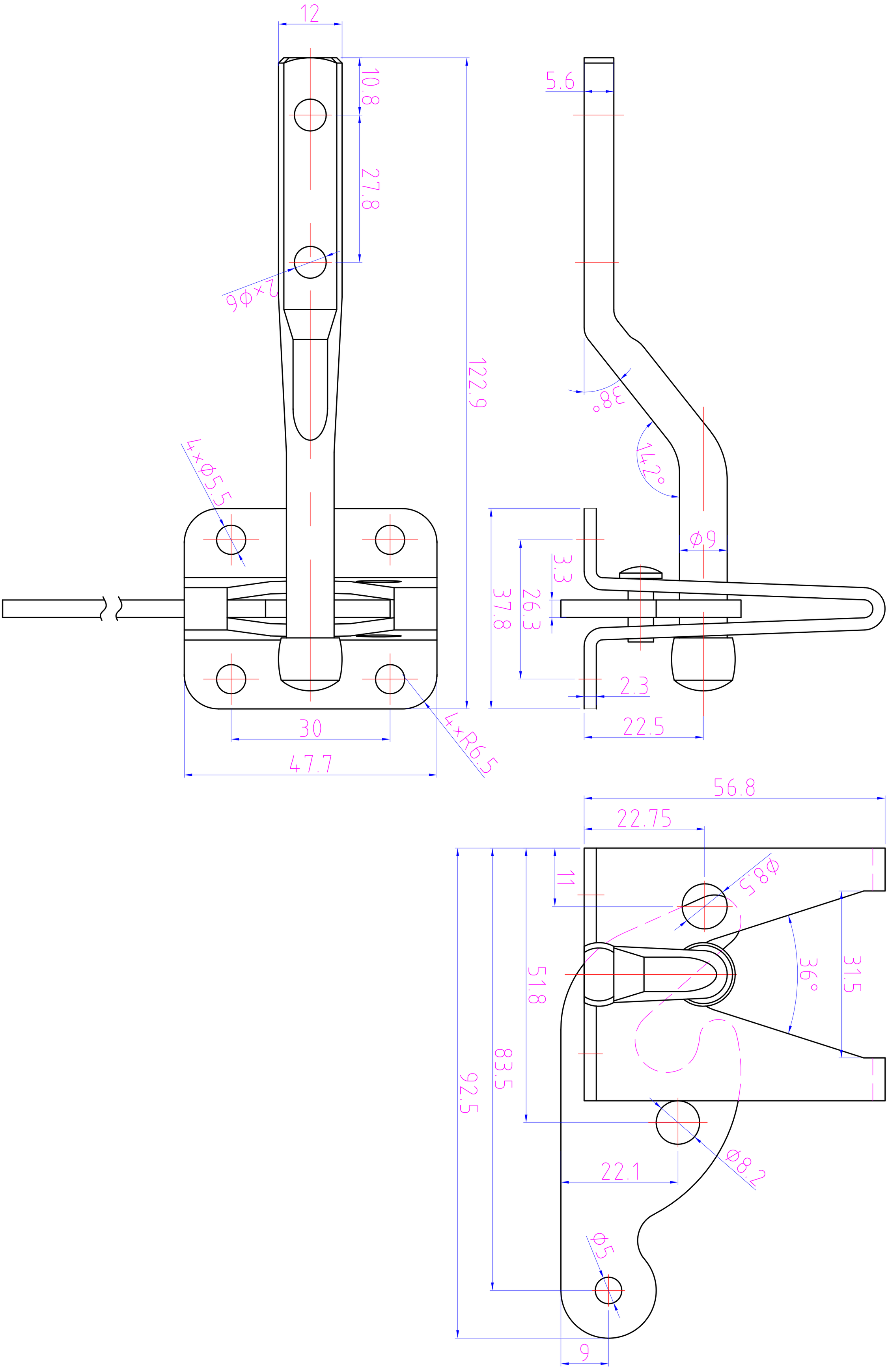
12
10.8
27.8
2×Φ6
122.9
4×Φ5.5
4×R6.5
30
47.7
5.6
8°
142°
Φ9
3.3
26.3
37.8
2.3
22.5
56.8
22.75
11
Φ8.5
36°
31.5
51.8
83.5
92.5
22.1
Φ8.2
Φ5
9