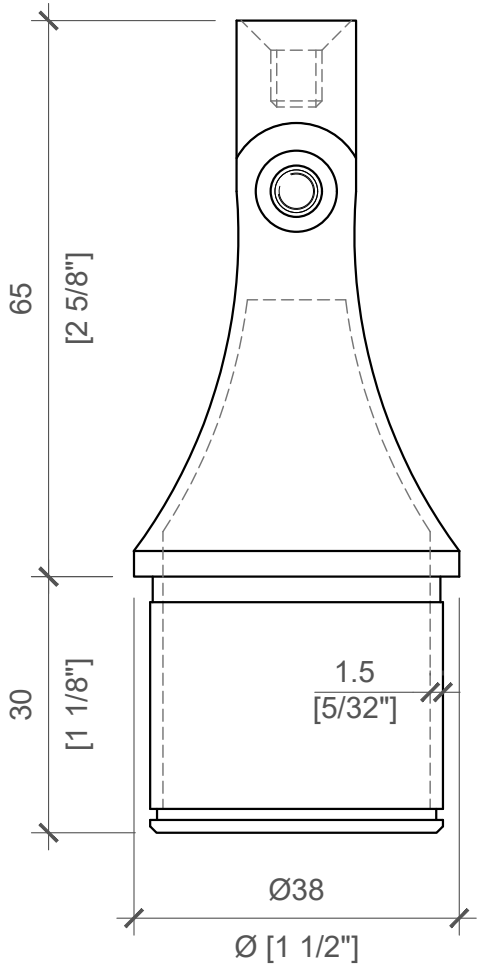

This drawing is the property of Euro Ornamental Forgings Inc. and may not be copied or reproduced in any way whatsoever without express written permission of said company.

euro ARCHITECTURAL COMPONENTS

127A Aviva Park Dr.,
Woodbridge, ON, CANADA
www.euroeac.com
Toll Free: 1-800-465-7143

TITLE:
#SSTS2050016S
SWIVEL TUBE SUPPORT FOR 38.1 X 1.5mm POST (SS316)

DATE: 26 APR 2022

SHEET: 1 OF 1