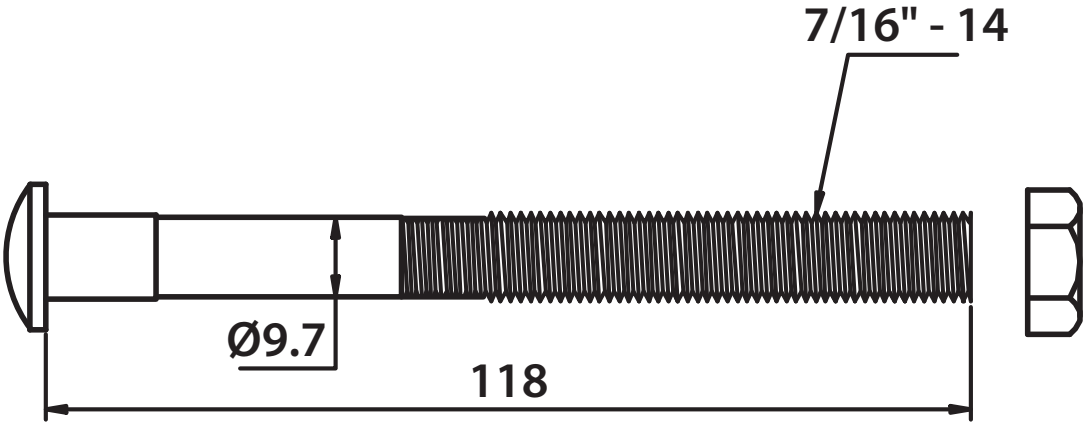
7/16" - 14
Ø9.7
118

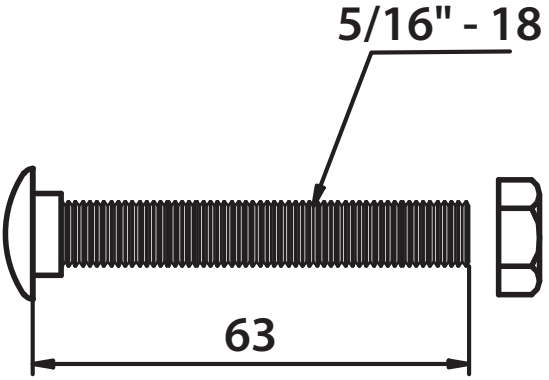
5/16" - 18
63

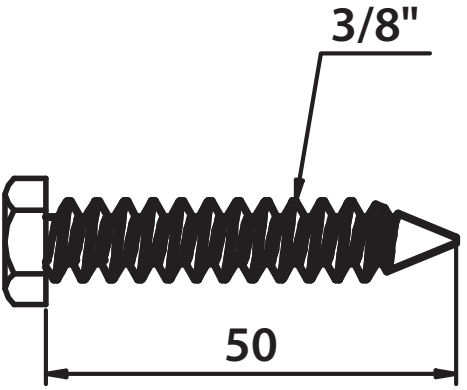
3/8"
50