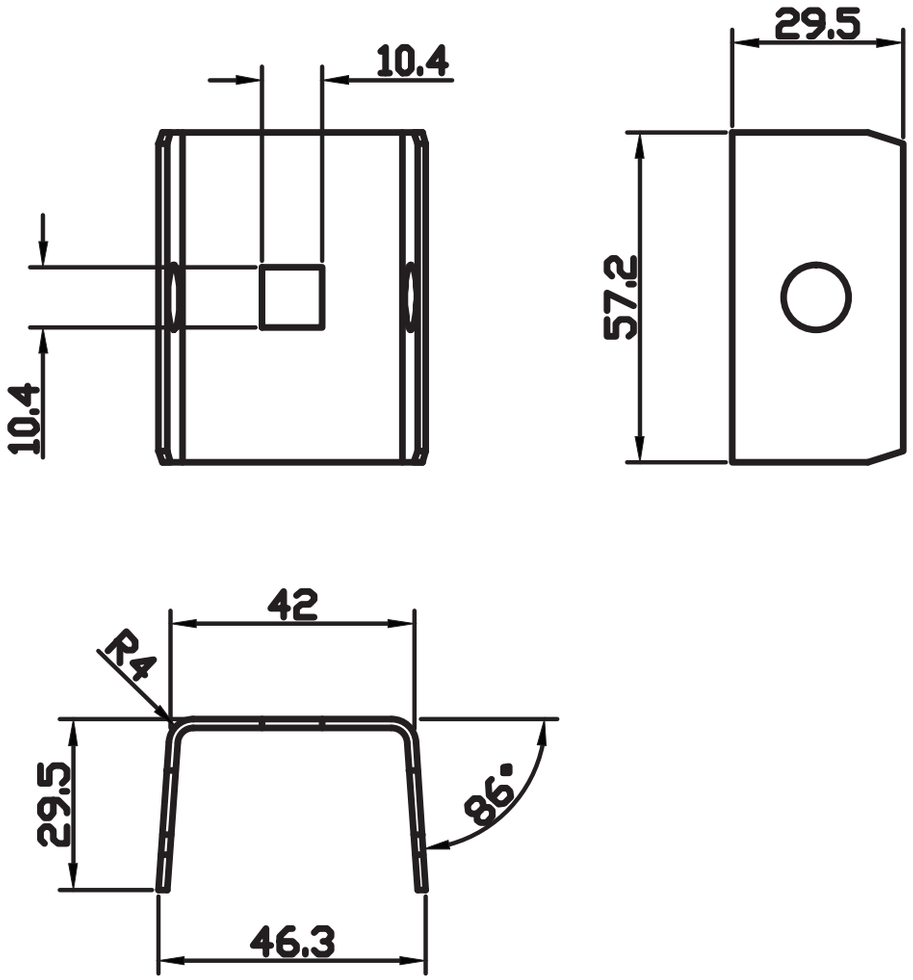
10.4
10.4
29.5
57.2
42
R4
29.5
86°
46.3