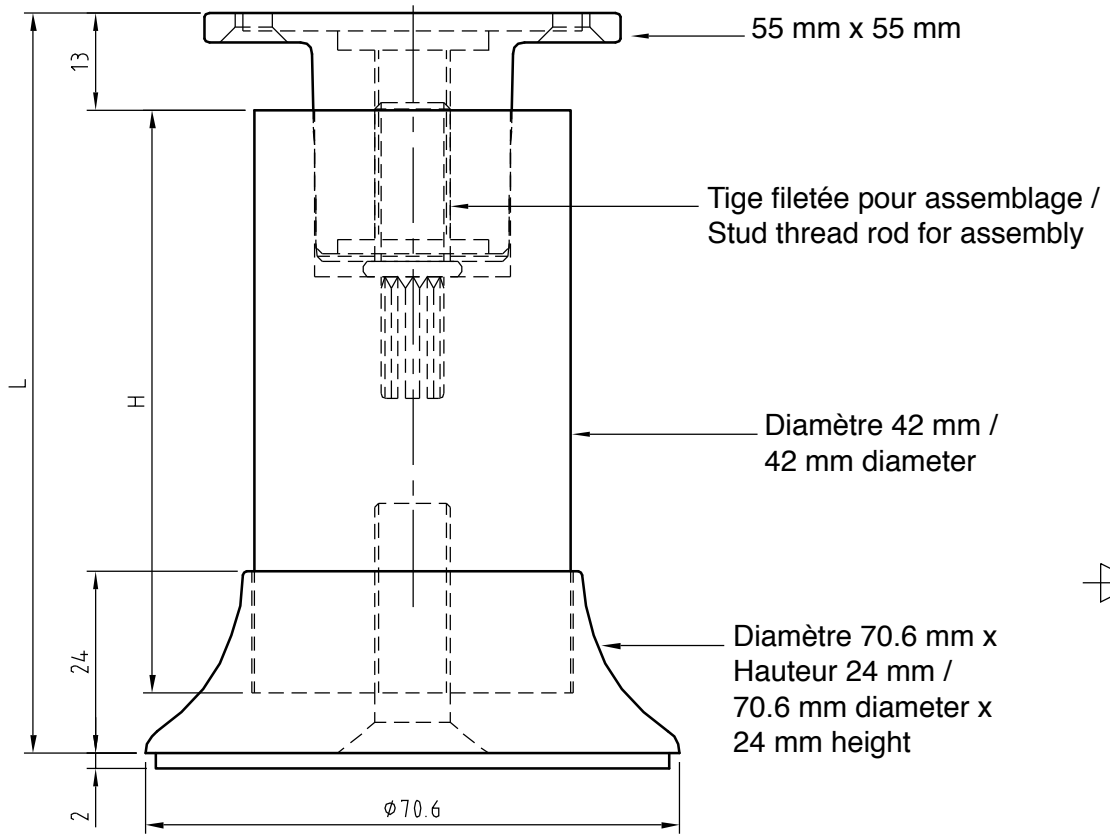

Model No.	H	L
64130100-xxx	77	98
64130150-xxx	127	148
64130200-xxx	177	198
64130250-xxx	227	248