SERVO-DRIVE
by Blum

BLUMOTION
by Blum

SERVO-DRIVE uno

Installation instructions

www.blum.com

Table of contents

Using the installation instructions

Please read the installation instructions and safety information before SERVO-DRIVE start-up.
We recommend that you use the orientation diagram for easier identification of the parts being described.
These installation instructions can be used for the SERVO-DRIVE electric motion support system for AVENTOS HF, AVENTOS HS, AVENTOS HL and AVENTOS HK.
However, only AVENTOS HF is shown as an example in the illustrations.
Please see the special AVENTOS installation instructions for the assembly steps for the mechanical AVENTOS HF, HS, HL and HK fittings without SERVO-DRIVE.

Intended use

SERVO-DRIVE supports the opening and closing of lift systems and may only be used under the following conditions:
- in dry, enclosed rooms
- in combination with AVENTOS lift systems from Julius Blum GmbH within the permitted technical specifications
- in combination with a Blum plug-in transformer.

NOTE

➢ The total cable length of 2 metres must not be exceeded.

Safety

SERVO-DRIVE complies with current safety standards.
Nevertheless, there are certain risk factors if these installation instructions are not followed. Please be aware that Julius Blum GmbH is not responsible for incidental or consequential damages that may arise if these installation instructions are not followed.

- All national standards must be followed for SERVO-DRIVE assembly. This includes, in particular, those related to the mechanical safety of moving parts and electrical cabling.
- Only qualified technicians may install and replace Blum components, modify the position of the Blum plug-in transformer or modify any cabling.
- The device may only be connected to a power supply, the voltage, type of power and frequency of which correspond to those listed on the rating plate (see Blum plug-in transformer).
- The outlet must be freely accessible.

- Maintain the safety distances to the Blum plug-in transformer that are listed in the installation instructions.
- Make sure that there can be no ingress of moisture into the Blum plug-in transformer and drive unit.
- Before starting repair or maintenance work, switch off the outlet to which the Blum plug-in transformer is connected or pull out the mains plug.
- The drive unit, Blum plug-in transformer and SERVO-DRIVE switch should only be cleaned with a damp cloth because ingress of moisture and aggressive cleaning materials can damage the electronics.
- Do not touch the area around the lever during the opening and closing motion.
- No damaged parts should be used.
- Sharp edges may damage the cables.
- Neither the Blum plug-in transformer nor any cabling should come into contact with moving parts.
- Never take apart a drive unit or a SERVO-DRIVE switch.
- Only one drive unit may be used per Blum plug-in transformer.

⚠ WARNING

Danger of death from electric shock!

➢ Never open a Blum plug-in transformer.

⚠ WARNING

There is a danger of injury if the lever springs upwards.

There is a danger of injury from the lever springing upwards when the front is removed.

➢ Do not push down on lever arm, remove it instead.

➢ Do not connect the plug-in transformer to the power supply while the fronts are unattached.

Warning signs and danger symbols

⚠ **WARNING**	WARNING indicates a danger that could lead to death or serious injury if not avoided.
NOTE	This NOTE sign indicates information that should be observed.

Structural changes and spare parts

Structural changes and replacement parts not approved by the manufacturer affect the safety and functionality of SERVO-DRIVE and are, therefore, not allowed.

- Only use original spare parts from Julius Blum GmbH.
- Blum components designed for this purpose are the only devices that should be connected to the Blum plug-in transformer.
- The cable from the plug-in transformer to the drive unit may not be extended.

Disposal

- All SERVO-DRIVE electronic components, including batteries, should be disposed of in a separate collection for electrical and electronic appliances as per local regulations.

Blum plug-in transformer safety distance

NOTE

A safety distance of 30 mm must be maintained for air circulation; otherwise, there is a risk that the Blum plug-in transformer could overheat.

➢ The dimensions in the drawing take into account the safety distance.

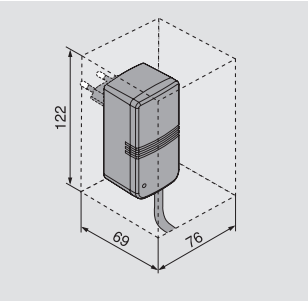

Troubleshooting

For troubleshooting information, please go to:
www.blum.com/sd/troubleshooting

Overview drawing

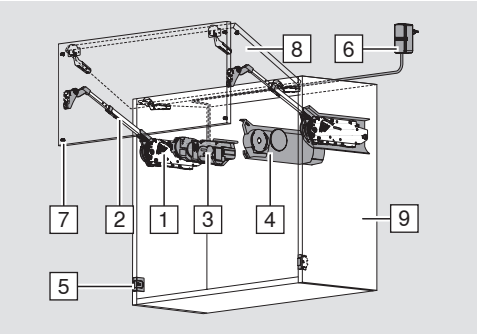

1 Lift mechanism
2 Telescopic arm or lever arm
3 Drive unit with LED display
4 Cover cap
5 SERVO-DRIVE switch with battery display
6 Blum plug-in transformer with LED display
7 Blum distance bumper
8 Front
9 Cabinet

Function

Electric motion support system

The SERVO-DRIVE switch triggers the automatic opening and closing action of SERVO-DRIVE for AVENTOS.

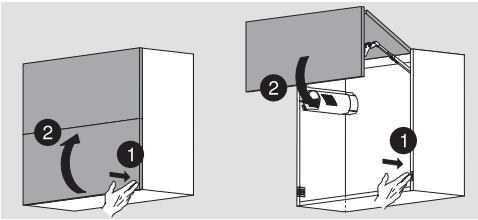

Press on the front

➢ the lift system opens automatically.

Press on the SERVO-DRIVE switch

➢ the lift system closes automatically.

Manual operation

The lift system can be opened or closed manually without restriction without damaging SERVO-DRIVE for AVENTOS.

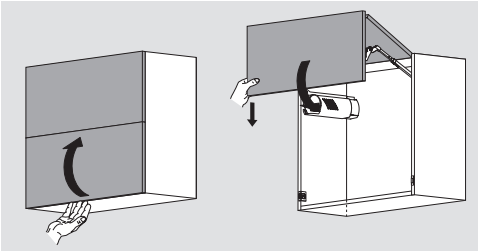

➢ Manual opening of the lift system by moving it upwards.

➢ Manual closing of the lift system by moving it downwards.

SERVO-DRIVE for AVENTOS

Distribution cable assembly and connecting node assembly

AVENTOS HF / HS / HL / HK

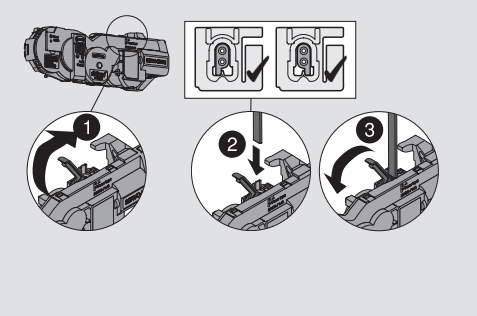

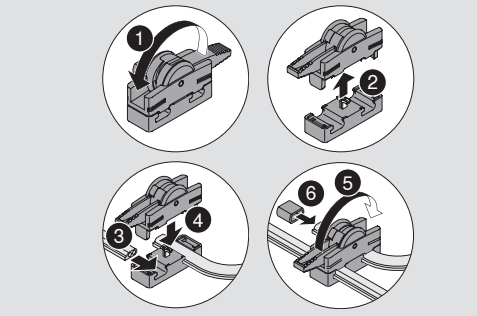

Drive unit adjustment

AVENTOS HF / HS / HL

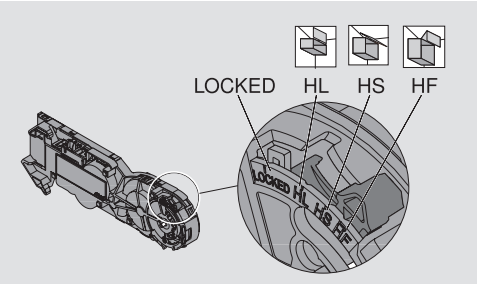

AVENTOS HK

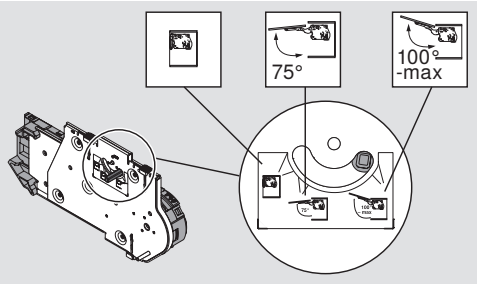

Drive unit assembly

NOTE

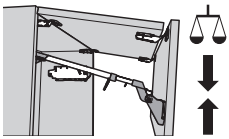

- ➢ Before SERVO-DRIVE for AVENTOS assembly, the lift mechanisms must be set so that the front remains open in different positions.
- ➢ The telescopic arm and/or lever arms must be in the completely open position for drive unit assembly.
- ➢ If required, install the opening angle stop only after drive unit assembly and before the reference run.

AVENTOS HF / HS / HL

NOTE

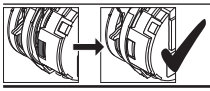

➢ The drive unit can only be locked when the orange slide is no longer visible in the view window.

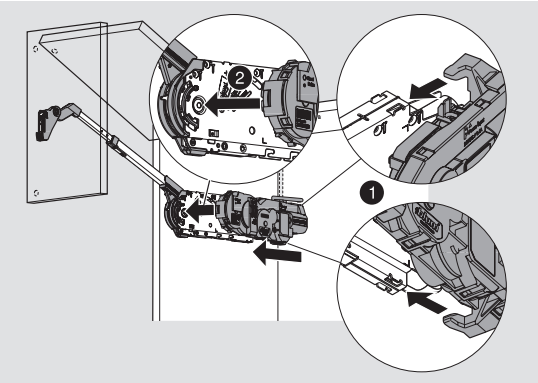

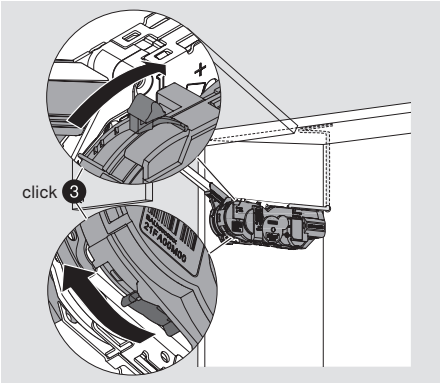

AVENTOS HK

NOTE

The drive unit can only be locked when the drive unit is inserted completely into the lift mechanism.

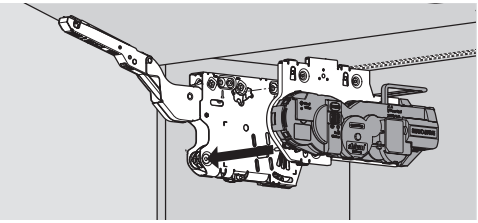

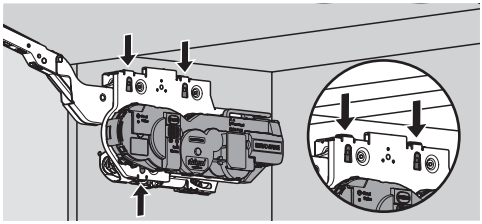

SERVO-DRIVE switch assembly

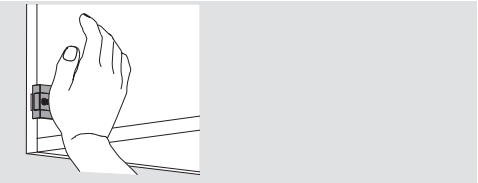

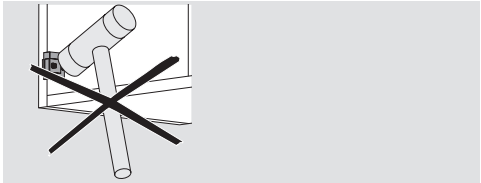

Blum distance bumper

NOTE

➢ Do not glue the Blum distance bumper

Assembly in the front

Aluminium frame: assembly in the cabinet side.

Cabling overview drawing

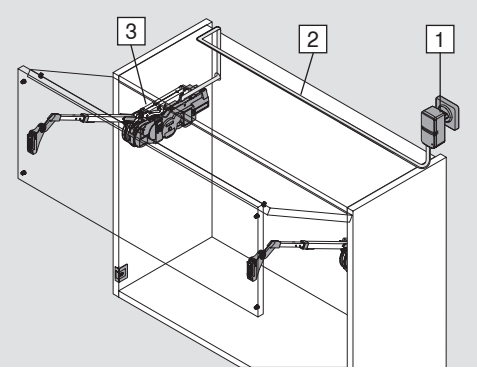

1 Blum plug-in transformer with LED display

2 Distribution cable

3 Drive unit

Cable diagram

NOTE

➢ Only one drive unit may be connected per plug-in transformer.

➢ The total cable length of 2 metres must not be exceeded.

SERVO-DRIVE for AVENTOS

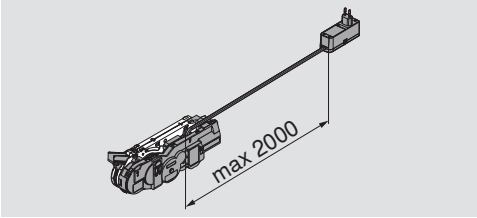

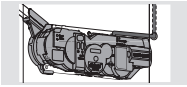

Back cabling

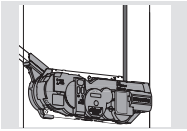

Upper cabling

Start-up

E-training | Lights up continuously | Flashes

A Activating the SERVO-DRIVE switch

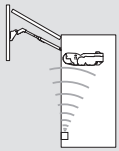

Setting up the wireless connection between the SERVO-DRIVE switch and the drive unit.
The SERVO-DRIVE switch can be activated with only one drive unit.

1

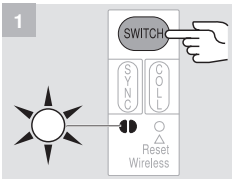

Press the <SWITCH> button

until the LED display flashes green.

2

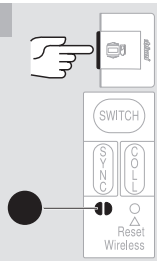

Press the SERVO-DRIVE switch

until the LED display lights up green continuously.

3

Repeat procedure **A 1–2** for all additional SERVO-DRIVE switches in the cabinet.

Operation ● Lights up continuously ☀ Flashes

B Carrying out reference run

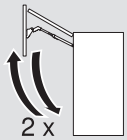

The drive unit recognises the required parameters using the reference run.

1

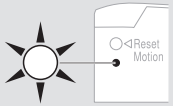

Reference run is required: LED flashes

2

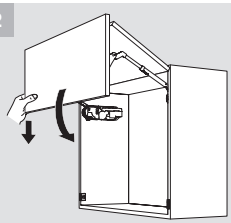

Close the front manually

3

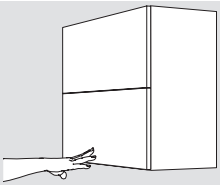

Press on front: the reference run starts automatically

4

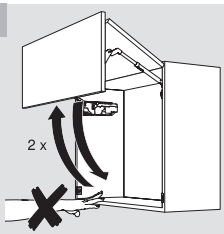

Front opens and closes twice automatically: under no circumstances should you try to manually interrupt or stop the procedure.

NOTE

If the reference run is interrupted, it should be reset – see Reset Motion **E 1**. Restart reference run.

E-training Lights up continuously Flashes

C Activating synchronisation

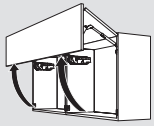

Up to three drive units can be synchronised allowing them to move simultaneously. This function is required for several cabinets with a uniform front.

1

Activating the SERVO-DRIVE switch → see **A 1–3**.

2

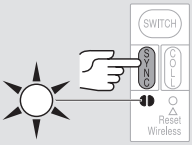

Press the <SYNC> button for the first drive unit

until the LED display flashes green.

3

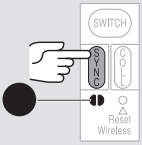

Press the <SYNC> button for the second drive unit

until the LED displays for both synchronised drive units light up green continuously.

4

Repeat procedure **C 2–3** for all additional drive units.

5

Carry out reference run → see **B 1–4**.

NOTE

If there is an activation error, reset the functions of all drive units → see Reset Wireless **F 1**.
Re-activate the SERVO-DRIVE switch, synchronisation and reference run → see **A 1–3**, **C 2–4** and **B 1–4**.

E-training Lights up continuously Flashes

D Activating collision avoidance

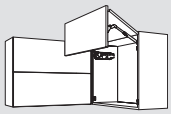

To avoid the collision of fronts, drive units (max. 6) are linked so that only one front can be opened at a time. A front is prevented from opening as long as a linked front remains open.

1

Activating the SERVO-DRIVE switch → see **A 1–3**.

2

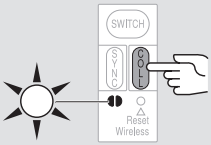

Press the <COLL> button for the first drive unit

until the LED display flashes green.

3

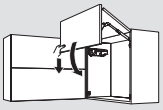

Close the front manually

4

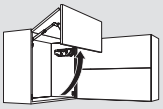

Open the second front manually

5

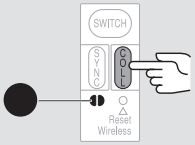

Press the <COLL> button for the second drive unit

until the LED displays for both drive units light up continuously green.

6

Repeat procedure **D 2–5** for all additional cabinets.

7

Carry out reference run → see **B 1–4**.

NOTE

If there is an activation error, reset the functions of all drive units → see Reset Wireless **F 1**.
Re-activate the SERVO-DRIVE switch, collision avoidance and reference run → see **A 1–3**, **D 2–6** and **B 1–4**.

E **Reset Motion**

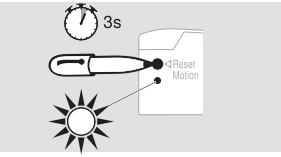

Resets the reference run and enables a new reference run to be started.

Press the <Reset Motion> button using a pen
(for at least 3 seconds) until the LED display flashes quickly.

F **Reset Wireless**

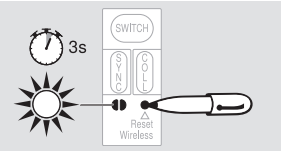

Deactivates all functions: all activated SERVO-DRIVE switches of the respective drive unit are deactivated.

Press the <Reset Wireless> button using a pen
(for at least 3 seconds) until the LED display flashes quickly.

Cover cap assembly

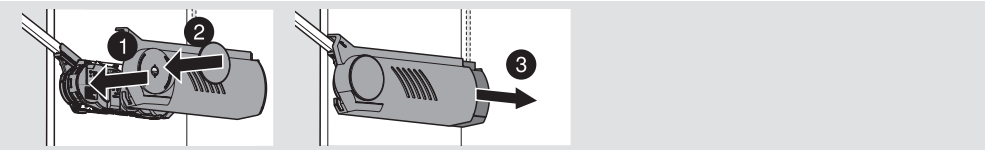

Replacing the SERVO-DRIVE switch battery

When the battery power begins to weaken, the battery display (LED) will begin to flash red.

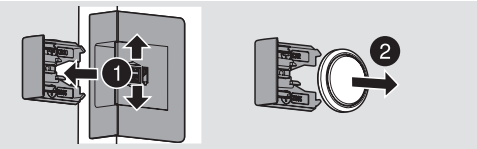

➢ Open the SERVO-DRIVE switch and remove the battery.

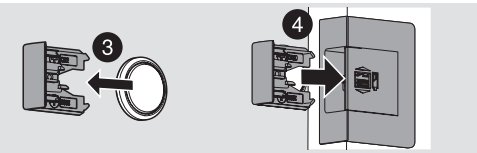

➢ Insert the new battery (type CR2032) and close the SERVO-DRIVE switch – note proper pole connection.

NOTE

➢ The SERVO-DRIVE switch battery must not be recharged or discarded into fire.

SERVO-DRIVE for AVENTOS

⚠ WARNING

Danger of electric shock

➢ Before starting repair or maintenance work, switch off the outlet to which the Blum plug-in transformer is connected or pull out the mains plug.

Removal

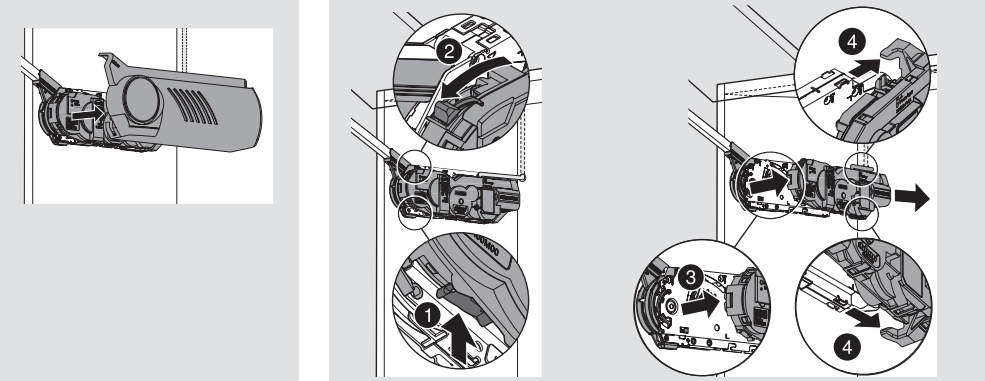

Distribution cable

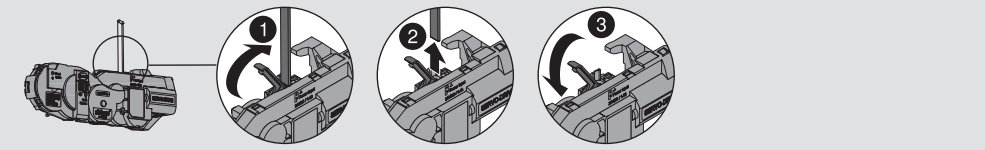

Julius Blum GmbH
Beschlägefabrik
6973 Höchst, Austria
Tel.: +43 5578 705-0
Fax: +43 5578 705-44
E-Mail: info@blum.com
www.blum.com

ISO 9001 Certified Quality System
ISO 14001 Certified Environmental System
ISO 50001 Certified Energy System