45 kg
99 lbs
8 - 10 mm
5/16"- 3/8"
27,8 mm
1 1/16"
28 mm
1 1/16"

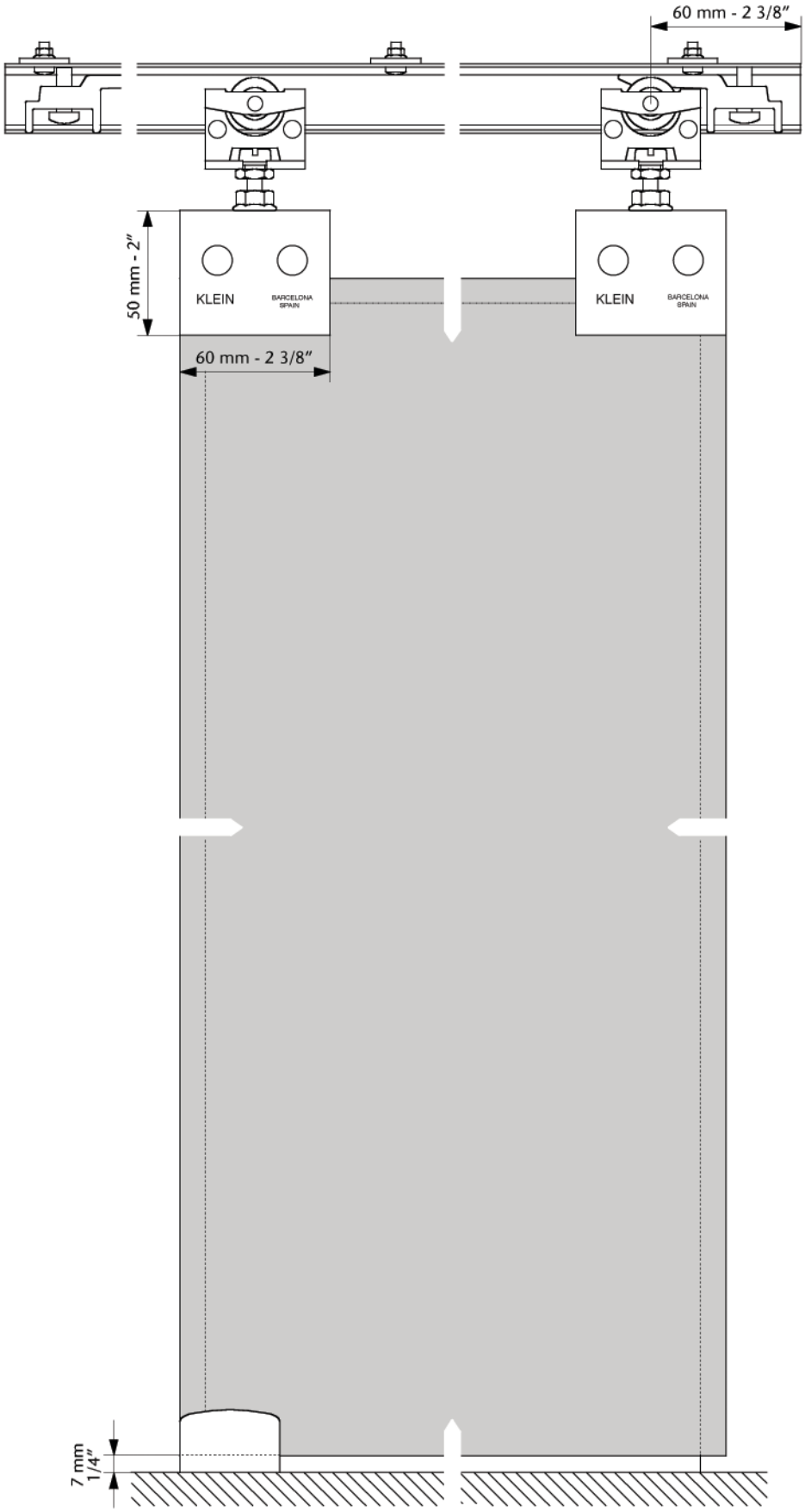
60 mm - 2 3/8"
50 mm - 2"
KLEIN
BARCELONA
SPAIN
KLEIN
BARCELONA
SPAIN
60 mm - 2 3/8"
7 mm
1/4"

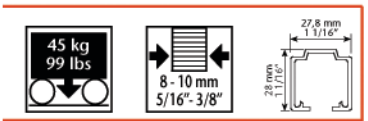
45 kg
99 lbs
8 - 10 mm
5/16"- 3/8"
27,8 mm
1 1/16"
28 mm
1 1/16"

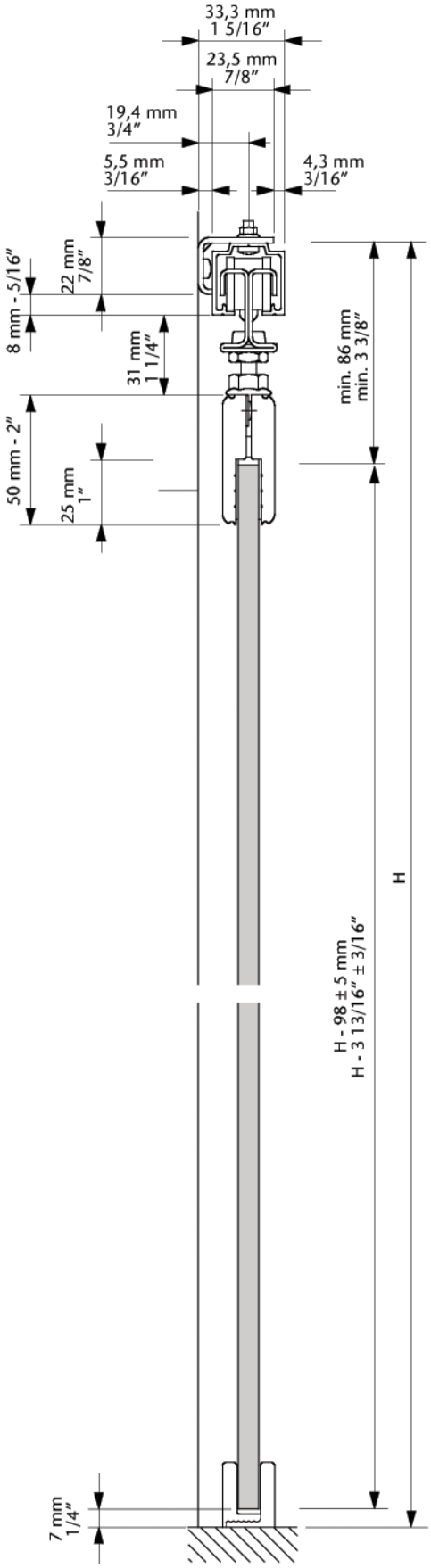
33,3 mm
1 5/16"
23,5 mm
7/8"
19,4 mm
3/4"
5,5 mm
3/16"
4,3 mm
3/16"
22 mm
7/8"
8 mm - 5/16"
31 mm
1 1/4"
50 mm - 2"
25 mm
1"
min. 86 mm
min. 3 3/8"
H
H - 98 ± 5 mm
H - 3 13/16" ± 3/16"
7 mm
1/4"

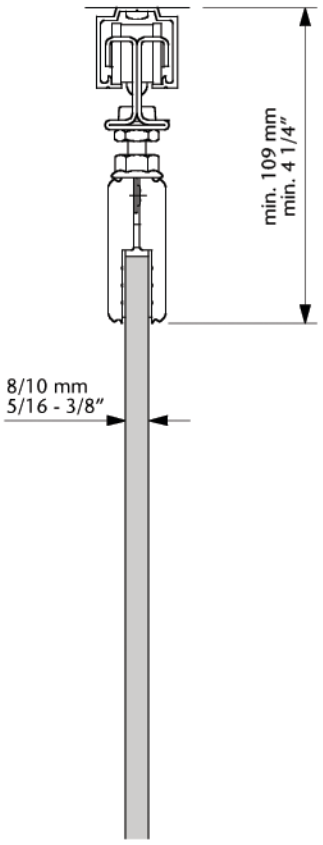
min. 109 mm
min. 4 1/4"
8/10 mm
5/16 - 3/8"