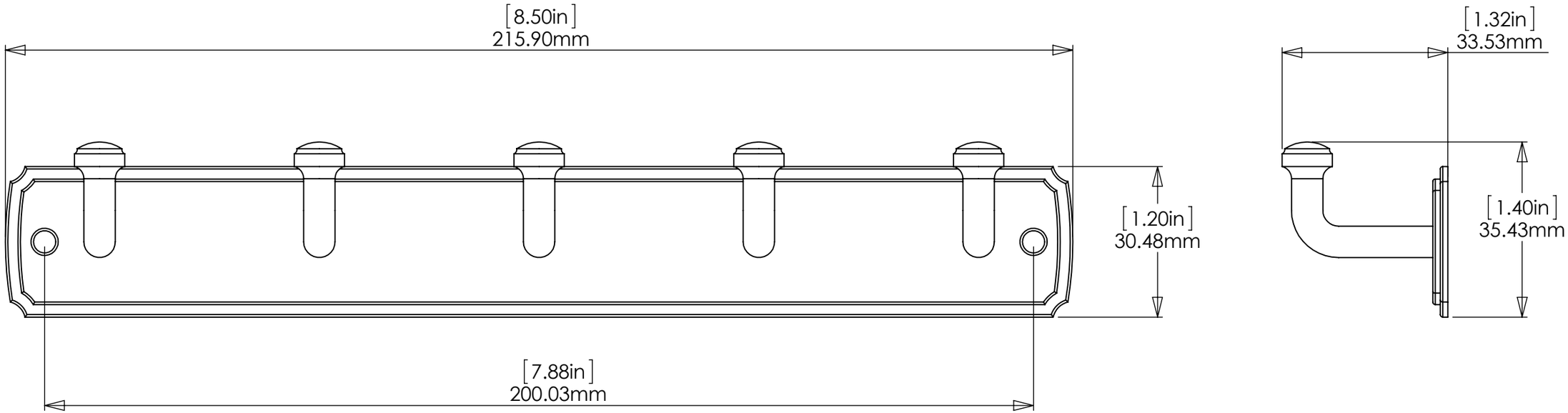
[8.50in]
215.90mm
[1.20in]
30.48mm
[7.88in]
200.03mm
[1.32in]
33.53mm
[1.40in]
35.43mm