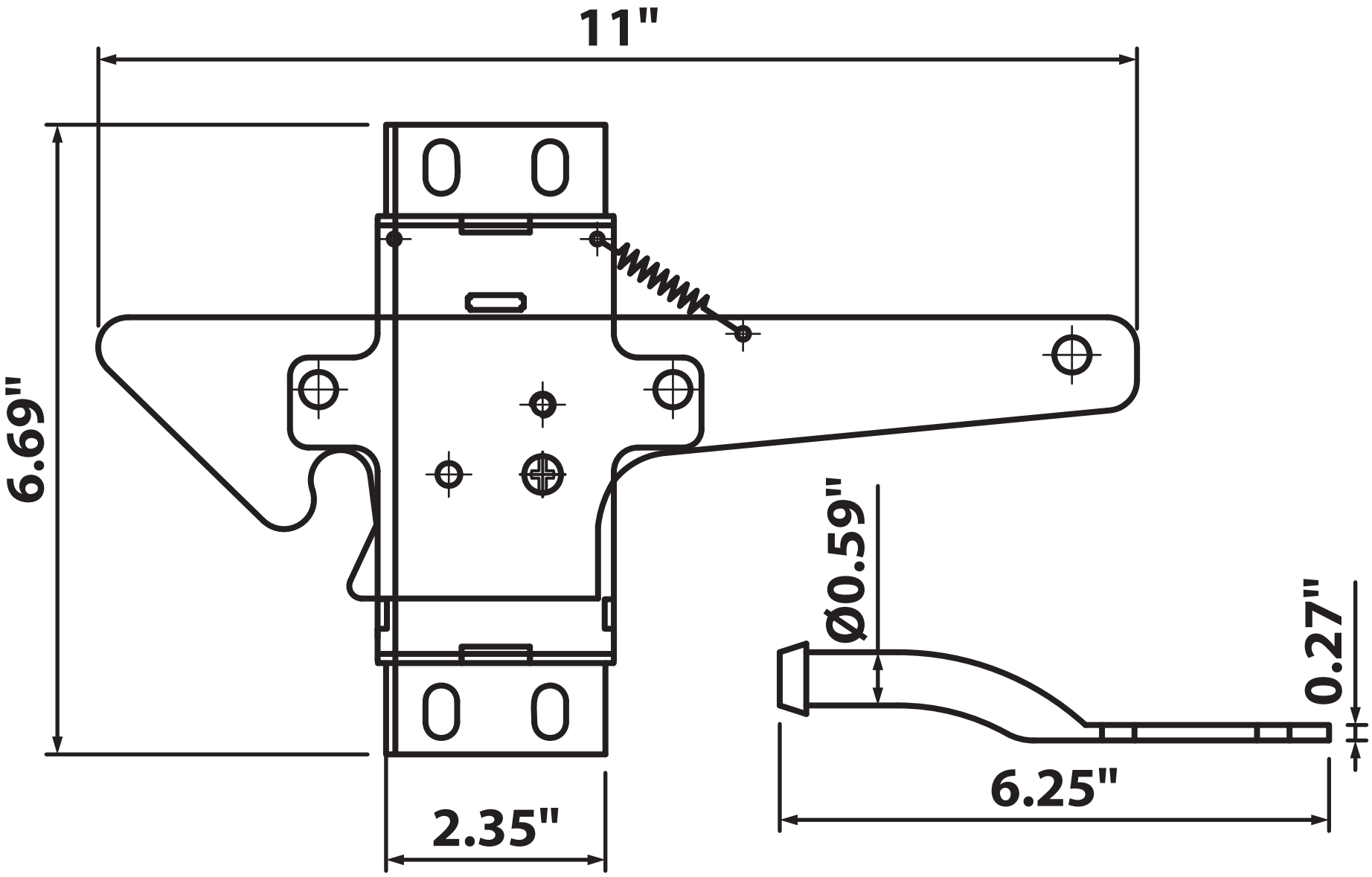
11"
6.69"
2.35"
Ø0.59"
0.27"
6.25"