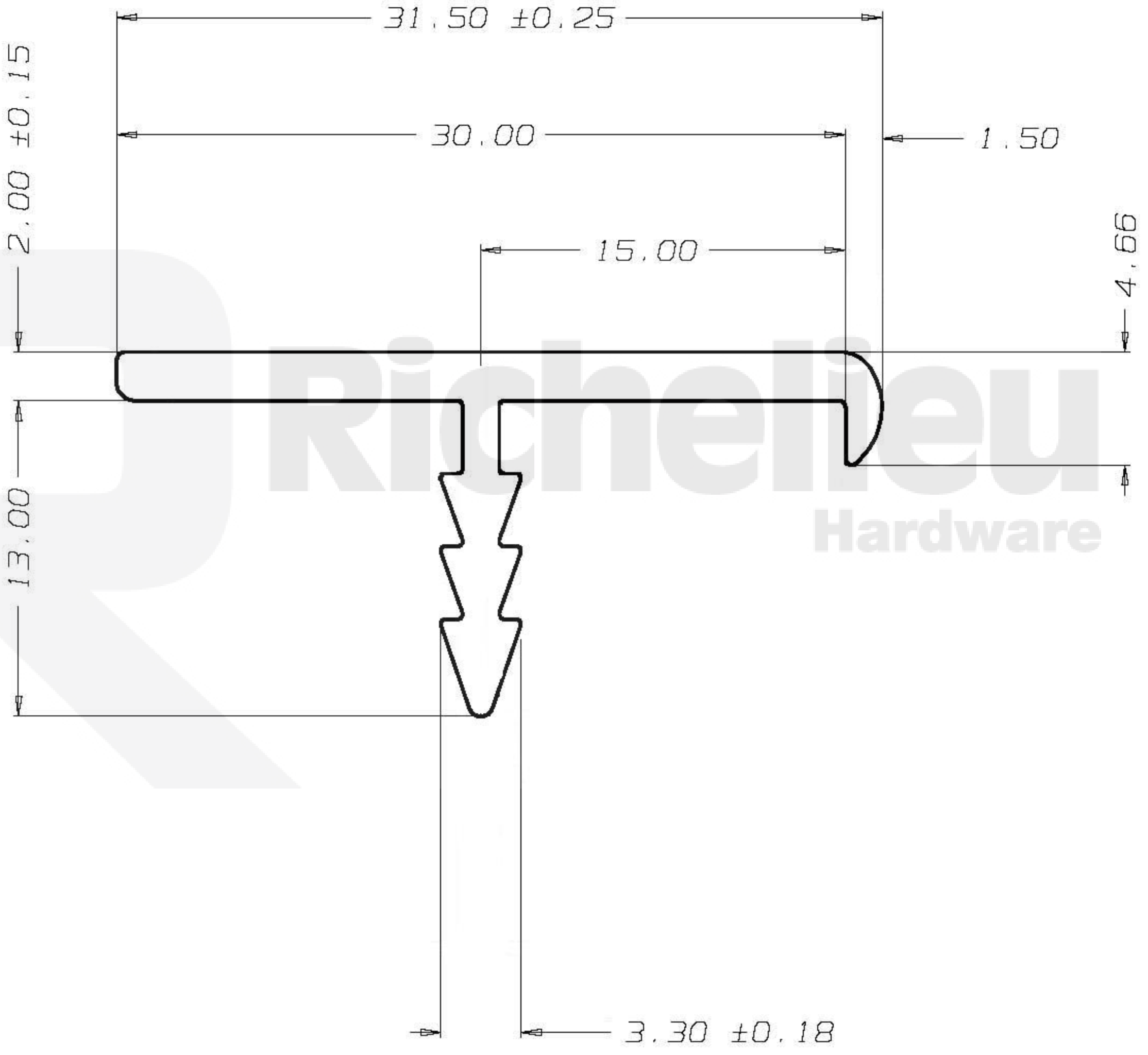

Richelieu Hardware