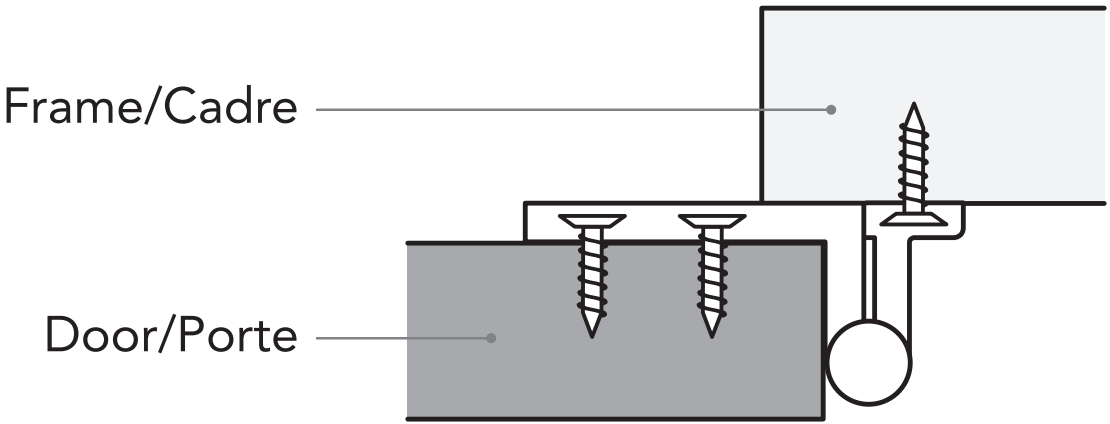Variable Overlay
Recouvrement variable